ULPOWER
AERO ENGINES

Interactive Maintenance Guide

Beta version 1.61r

Click an engine or scroll to next page to continue

ULPOWER
AERO ENGINES

Contents:

Important note: This guide is provided as a support to the official ULPower manuals.
All content is superseded and over-ruled by the latest manuals available from ULPower at www.ulpower.com

Welcome to the ULPower maintenance guide Beta 1.61r

This guide provides a quick access to maintenance schedules, procedures for routine maintenance and also some selected non-routine maintenance activities. Your particular installation may vary slightly, and we refer you to your engine and OEM installation guides for further details.

You may always return to the 'Contents Page' for maintenance by clicking on the ULPower logo on the top right of each page.

You may also simply 'scroll' through the guide. If you are using this guide on a mobile phone or tablet you may need to download the Adobe Acrobat Reader to enable the links. Using the links will make use easier. Each page has a reference on the top right of the page, making reference when speaking to another guide user easier.

This document is provided as a guide only and is a beta product and may contain errors. Please use at your own risk and do let us know if you find any errors or provide ideas for improvement.

Please note that the definitive guide will always be the latest manuals available from ULPower - http://ulpower.com – The abbreviation "i.a.w. … manuals" means 'in accordance with… manuals" – and we ask you to **ALWAYS cross check with the latest manuals before carrying out any work on your engine**.

Regards
The ULPower Team (email *info@ulpower.com*)

E&OE April 2018

Maintenance Schedule for ULPower Aero Engines

REMEMBER: The latest manuals overrule any content in this ‘generic’ guide:

TBO is 1500 hours or 12 years for i and iS engines. NOTE: The Aerobatic engines have factory inspection after 250 hours of aerobatics.

Six year replacement parts include:

- Venting and return hose between breather and oil/air separator
- All fuel lines
- Oil lines to/from oil cooler

Maintenance intervals, an initial 5, 15 and 50 hour (bedding in maintenance), is followed by 100 hour interval or annual checks. It is recommend to reduce that to 50 hour intervals for those operating in dusty environments or for those using leaded fuels. For those aircraft doing low hours, each ‘annual’ may be considered a ‘100 hour’ check. Therefore on the second ‘annual’ a 200 hour visit is required, etc.

We suggest printing the maintenance schedule out from the relevant manual and, when filled in, keep it with the engine maintenance records. You can download from the engine page for your engine from here http://ulpower.com/en/engines

Maintenance Schedule for ULPower Aero Engines

Inspection Items	Check (hr.)				
	5	15	50	100	200
Visual inspection of the engine					
a) General inspection of the engine for damage and abnormalities, including obstructions, cracks, wear and condition of cooling air ducts, baffling and cylinder cooling. Take note of changes caused by temperature.		X	X	X	X
b) Thoroughly inspect engine for missing or loose bolts, nuts, pins, etc. Replace as necessary.		X	X	X	X
c) Inspection of all temperature and pressure sensors.		X	X	X	X
d) Inspection of all oil lines for damage, including leakage, hardening from heat, porosity, loose connections and secure attachments. Verify routing for kinks and restrictions like restricted elbows.		X	X	X	X
e) Inspect all fuel lines, filters, injectors and pressure regulator for damage, including leakage, hardening from heat, porosity, loose connections and secure attachments. Verify routing for kinks and restrictions like restricted elbows.		X	X	X	X
f) Verify the complete electrical wiring system including tight fit of connectors, damage and wear.		X	X	X	X
g) Check exhaust system for cracks (especially when cabin heating is taken from around the exhaust).		**X**	**X**	**X**	X

Maintenance Schedule for ULPower Aero Engines

Inspection Items	Check (hr.)				
	5	15	50	100	200
Verification of engine suspension					
a) Inspect engine mounts, dampers and fasteners for secure fit, including damage from heat, deformation, cracks. Replace as necessary.		X	X	X	X
Engine external parts					
a) Inspect attachment screws and nuts of all external parts for security and fit. Inspect safety wiring. Replace as necessary.		X	X	X	X
ECU					
Check connections are secure			X	X	X
Verify air pressure sender route/line is secure and free of blockages			X	X	X

The best way to approach a visual inspection is to remove cowls, as appropriate, and take a detailed, sequential look around the engine. Make yourself familiar with your engine installation. Take pictures to help you remember 'what it looks like' and watch for development of heat affected areas, mechanical wear, hardening, etc. Visual inspection may include (on a cool engine) 'looking with your fingers' for oil leaks, or exhaust gas blow-by, loose connections, etc. (watch out for locking wire and other sharps). Use of a good torch to light up dim areas may help in these tasks.

Maintenance Schedule for ULPower Aero Engines

Inspection Items	Check (hr.)				
	5	15	50	100	200
Propeller Flange					
a) check the torque of the propeller flange bolt: must be 300 Nm	X	X			
Alternator Flange					
a) check the torque of the alternator flange bolt: must be 280 Nm					X
Oil level					
a) Remove magnetic drain plug from bottom of oil sump inspect and clean magnetic pickup. Drain old oil and inspect for foreign particles. Record findings.		X	X	X	X
b) Replace copper sealing washers of drain plug and refit to oil sump. Torque to 25Nm.		X	X	X	X
c) Refill oil sump with approx. [3 litres (iSA: 4l) 4 cylinder] [4 litres of oil (iSA 5l) 6 cylinder]. For correct volume and type of oil, refer to Op. Manual.		X	X	X	X
d) Inspect oil level and add oil as necessary to maximum mark. For correct type of oil, refer to Op. Manual. Record quantity of oil added **NOTE: If using AVGAS, recommended oil change is 50hours**		X	X	X	X
Oil Filter					
a)Remove oil filter from engine and install new oil filter. Wipe clean mating surface. Lubricate mating sealing ring of new oil filter with clean engine oil. Screw on new filter by hand and torque to 15Nm. Cut old filter (without creating metal chips/fillings) and inspect filter mat. Record findings.		X	X	X	X

Maintenance Schedule for ULPower Aero Engines

Inspection Items	Check (hr.)				
	5	15	50	100	200
Air Filter					
a) Inspection of the air filter. Replace as necessary.		X	X	X	
b) Replace air filter.					X
Fuel Filters					
a) Remove all fuel filters from aircraft and install new ones.		X			X
Cylinder heads (See note "Cylinder head bolts torque" - When checking torque**, do not loosen first**)					
a)Check torque of cylinder head bolts. Re-torque as necessary (36Nm) – Do not loosen first.		X		X	X
Rocker/Tappet (T = done on ENGINE time, as opposed to 'annual on a low hours engine)					
a) Check tappet-valve clearance and adjust as necessary (0.15mm ±0.05mm cold inlet and exhaust) (0.006in ±0.002in) Record results		T	T	T	T

Maintenance Schedule for ULPower Aero Engines

Inspection Items	Check (hr.)				
	5	15	50	100	200
Throttle Valve					
a) Inspect free movement of throttle lever. Inspect that throttle cable allows full travel of throttle lever.		X	X	X	X
a) Inspect throttle cable. Replace as necessary.				X	X
Spark Plugs					
a) Renewal of spark plugs.					X
Spark Plug Connectors					
a) Verify security of connectors on both spark plug and ignition coils.		X	X	X	X
Compression Check					
a)Inspect compression by differential pressure method. Record results. - Leak test need to be done at least once a year - In case running leaded fuel, leak test required every 50Hr					X

Maintenance Schedule for ULPower Aero Engines

Inspection Items	Check (hr.)				
	5	15	50	100	200
Engine Test Run					
a) Start the engine and run to operating temperature. Smoothly apply throttle to full power. Check temperatures and pressures are within limits. Record oil pressure, fuel pressure and engine speed (rpm). Bring engine to idle speed. Record engine speed (rpm)		X	X	X	X
b) After engine test run, if replaced, re-torque oil-filter		X	X	X	X
c) After engine test run, inspect oil level and add oil as necessary to maximum mark.		X	X	X	X
d) After engine test run, adjust idle speed lever position if necessary. Record new engine idle speed.		X	X	X	X
General Note					
a) All service instructions and service bulletins are complied with.		X	X	X	X

How to…

In order to discover more about each task, click on the relevant link below

Visual inspection Engine/suspension /external parts

ECU

Propeller Flange

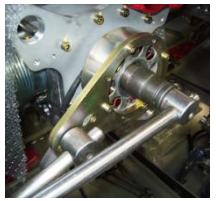

Alternator Flange

Oil Level
Oil Change
Oil Filter

Air Filter inspection /Replacement

Fuel Filters

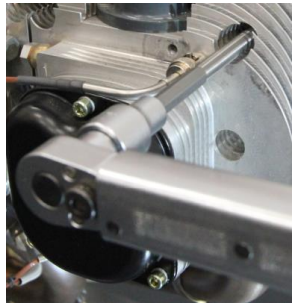

Cylinder Heads

Rocker/Tappet

Throttle Valve
Throttle Cable

Spark Plugs /Connectors

Compression Check

Engine Test Run

Non-routine maintenance

Visual Inspection…

Start at one point and work systematically around the engine looking for evidence of interference abrasion (where parts have rubbed on cowlings/hoses/etc) as well as signs of leaks of oil or combustion gasses. Look for degradation in hoses and wires, security of senders and their connectors, etc. Pay particular attention to the exhaust looking for cracks in material or welds. Check for damaged, broken or missing springs/bolts/cotter pins/etc.

Heat damage may occur and is often first spotted by discolouration or changes in surface appearance.

Take your time, and take photos for reference of any items you want to monitor.

Correct any anomalies found, making appropriate references in the logbook.

ECU…

The ‘old black ECU’ requires that you disconnect the connectors from ECU, check the contacts ECU-side and connector side, make sure that they are clean and there is no oxidation, replace both if necessary and re-connect the connectors to the ECU. This is NOT necessary on the RED ECU (see picture left).

The RED ECU should not normally need the connectors opened and checked, however if there is a connection issue you can check for corrosion there. If all is working well, it is probably best left closed.

The Air Pressure sender mounted inside the ECU is connected to a location where the pressure is as close as possible to the AIR on the OUTSIDE of the air filter. Generally this is done with a small hose. If the hose is damaged or blocked it will affect the mixture control of the engine. You may be able to check atmospheric pressure is reading correctly by using ULRead.

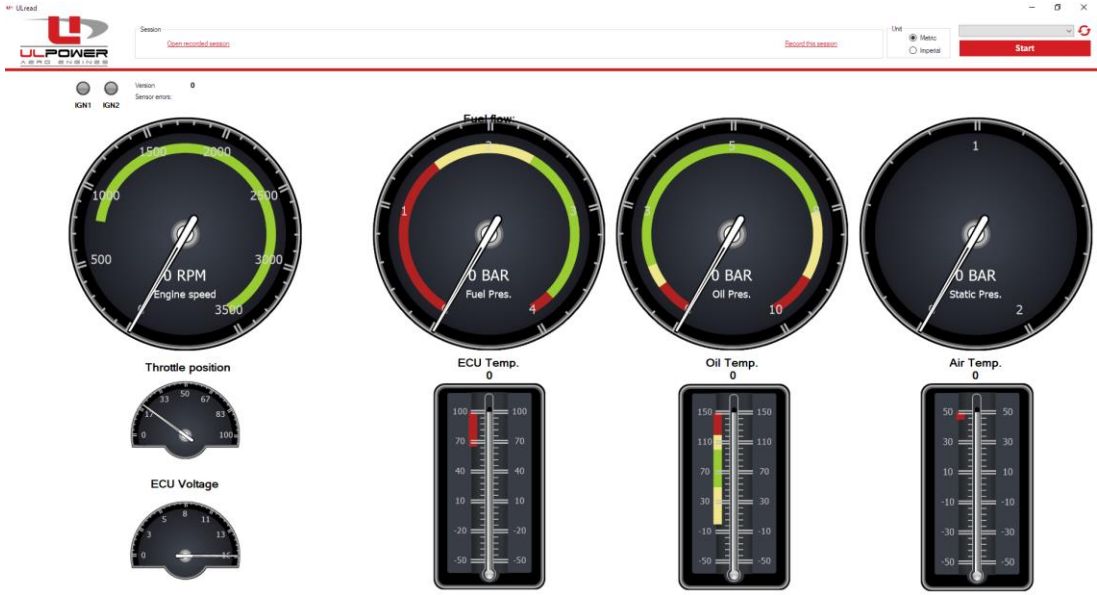

If unsure of a clear line, **disconnect** the hose from the ECU and blow through, then reconnect.

CAUTION! NEVER BLOW INTO THE PRESSURE SENDER PORT/LINE AS THIS MAY DAMAGE THE SENDER INSIDE THE ECU.

Propeller Flange

Tools Needed

3mm Allen Key
T063006 Flange holder (incl. first service kit)
2 x M14 bolts
Torque wrench (300Nm)

Loctite 243
[5mm drill]
[M6 tap]

1. Unscrew the M6 screw using a 3mm Allen key.

2. Remove the locking plate. Use an M6-bolt to pull out the plate.

3. Attach the propeller flange holder (T063006) to the prop flange with M14 bolts

4. Torque the bolt to 300 Nm while holding the prop flange. (right hand thread)

5. Place the locking plate over the hex top of the bolt. Find out if the existing M6 hole in the locking plate correspond with the M6 hole in the flange. If not, move the ring through 60° (one flat) on the bolt.

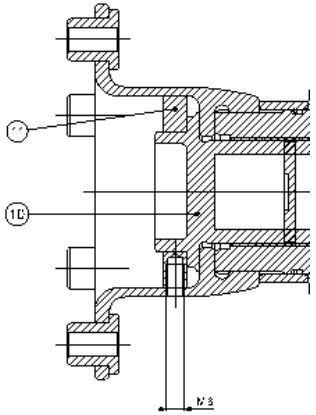

5a. IF the M6 holes do not match, drill a hole ø5 through the locking plate and cut M6 thread untill just touching the bottom of the hole.

6. Reinstall M6x15 grub screw until head is about 0.5mm below surface, using Loctite 243 and lock the screw again by punching 2 dimples

CAUTION!! It is possible during initial running that the flange bolt may lose a little torque. Therefore re-torque after 5 hours and again after 15 hours. Then, follow maintenance. manual.

Alternator flange bolt torque cheque

Tools Needed

T063002 Alternator tool
Allen Key
Torque Wrench (280Nm/10Nm)
Breaker bar(s)
Spanners

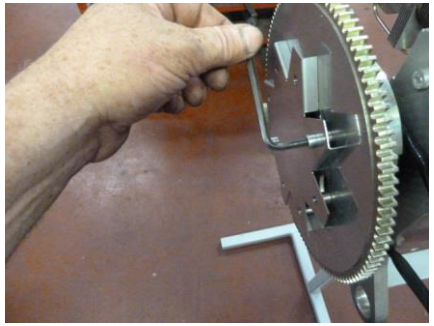

1. Unscrew the 8 cap screws with an Allen key to remove alternator fan and starter ring gear. (NB Keep each pair of NordLock washers under the cap screws together.)

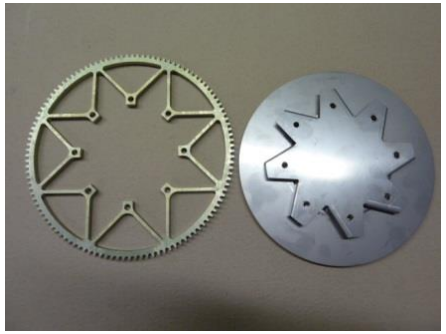

2. Keep starter ring gear and fan facing in the same direction as it was assembled.

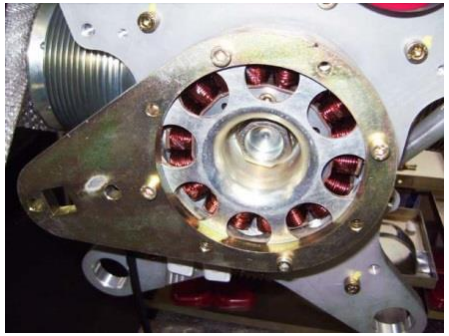

3. Attach the alternator flange holder tool T063002 to the flange with 4 bolts M6X16.

NOTE: This is a 'check of torque' procedure.
<u>DO NOT loosen main bolt</u>.
Simply CHECK the torque.
This is a 'left hand' bolt and therefore tightens 'anti-clockwise'

When checking torque, do NOT loosen first – or you will break the Loctite seal.

If you accidently loosen the bolt you will need to re-set it with Loctite as shown here.

If unsure contact your ULPower dealer.

Alternator flange bolt torque check

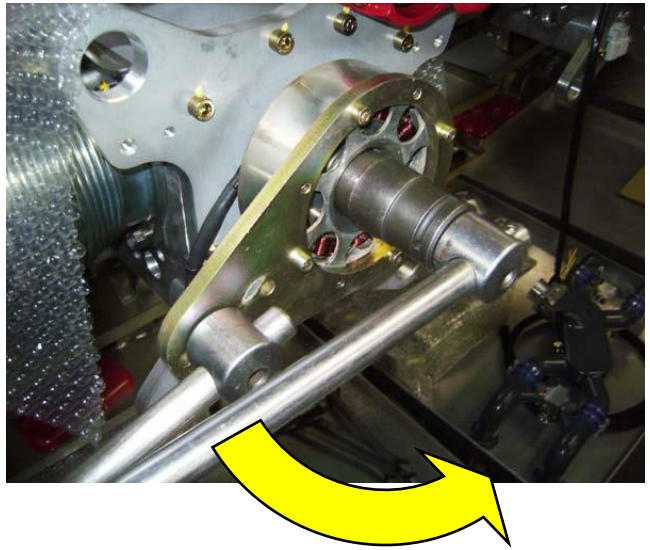

4. Hold the alternator flange in place while checking the torque of the central bolt. Note that the bolt has left hand thread and so you have to turn it anti - clockwise to check the torque!
Check Torque of central bolt is 280Nm and record in the engine log book.

CAUTION: When checking torque, do NOT loosen first.

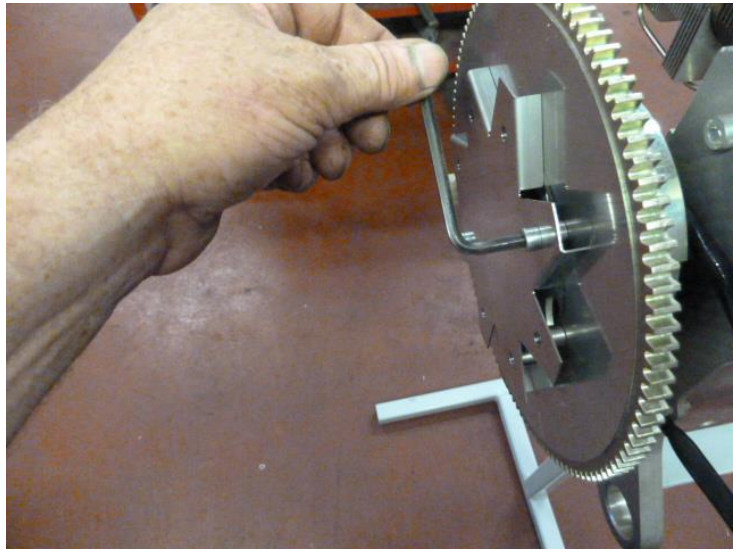

5. Remove the holder tool and collect all 8 cap screws together with the NordLock washers. The washers are in pairs and the side with the larger steps are faced towards each other.

6. Reassemble the alternator ring gear and alternator fan with the cap screws and NordLock washers.

Torque the cap screws to 10Nm.

Oil…

Tools Needed

Oil (Aeroshell 15W50 or Motul)	Funnels
Oil Filter	
S3141815 sealing gasket	Oil pan/receptacle
Filter Wrench	
Filter socket	Torque wrench (15Nm / 25Nm)

1. Carefully remove cowling and place a clean oil pan/receptacle ready to catch the old oil (make sure that it is able to contain all of the oil drained).
2. Remove the magnetic drain plug (catch the copper gasket) and direct the old oil into the oil pan.
3. Inspect/clean the mag. plug (record findings). Replace the copper gasket, refit and torque to 25Nm.
4. Remove oil filter. Apply fresh oil to the seal of new oil filter. Install and torque to 15Nm.
5. Refill with correct grade and quantity of oil.
6. Cut old filter (without creating metal chips/fillings) and inspect filter mat. Record findings. Filter old oil from sump. Record findings.

Oil Qty (litres)	4-cylinder	6-cylinder
3	260/350i/iS	
4	260/350iSA	390/520i/iS
5		390/520iSA

CAUTION!! DO NOT change oil on a HOT engine. If you do warm the engine for quicker oil draining do not handle oil above 40C/104F to avoid burns/scalding.

Air Filter…

The ULPower air filter is NOT a serviceable item. It is normally replaced at 200 hours, however, it may require more frequent changes dependent on operational conditions.

It is not normally necessary to remove the filter for inspection. If you do remove the filter ensure that it is correctly re-installed/replaced.

Look for signs of damage to the filter media and retaining mesh. Look for damage to the rubber flange and ‘wiggle’ the end of the filter gently watching for ‘cracks’ or other damage.

Replace if necessary.

Record findings.

Fuel Filters…

Fuel Filters

ULPower engines have a ‘pre-filter’ installed at the entry to each fuel pump and a ‘fine filter’ after the pumps and before the fuel rail.

These are NOT serviceable filters. They are replaced after the first 15 hours, and then are a 200 hour (or two year) replacement item. In dusty or adverse conditions more frequent changes may be required.

Simply remove the clips holding the filter in place and replace the filter itself.

Respect directions of flow and check for damage to hoses. Replace any damaged hoses.

Pay particular attention to any sensors (such as fuel pressure sensors) which may be attached to the fine filter, depending on your installation.

REMEMBER: Pressurise the fuel system and check for leaks before attempting to start the engine.

Cylinder Heads…

As part of a maintenance schedule you are asked to check the torque on FOUR of the cylinder head bolts as a precautionary safety measure.

For each cylinder head there are SIX bolts which must remain torqued to ensure that the head seals properly with the cylinder to avoid loss of combustion pressure.

TWO of these bolts are not easy to get to (one under the rocker cover and one behind the inlet manifold) and DO NOT normally need to be torque checked during this operation.

As part of regular maintenance, check the torque on the FOUR easily accessible cylinder head bolts. If these four are torqued correctly, there is no further action required. If they are NOT then refer to your nearest ULPower dealer for assistance.

The recommended torque check procedure is as follows:-.

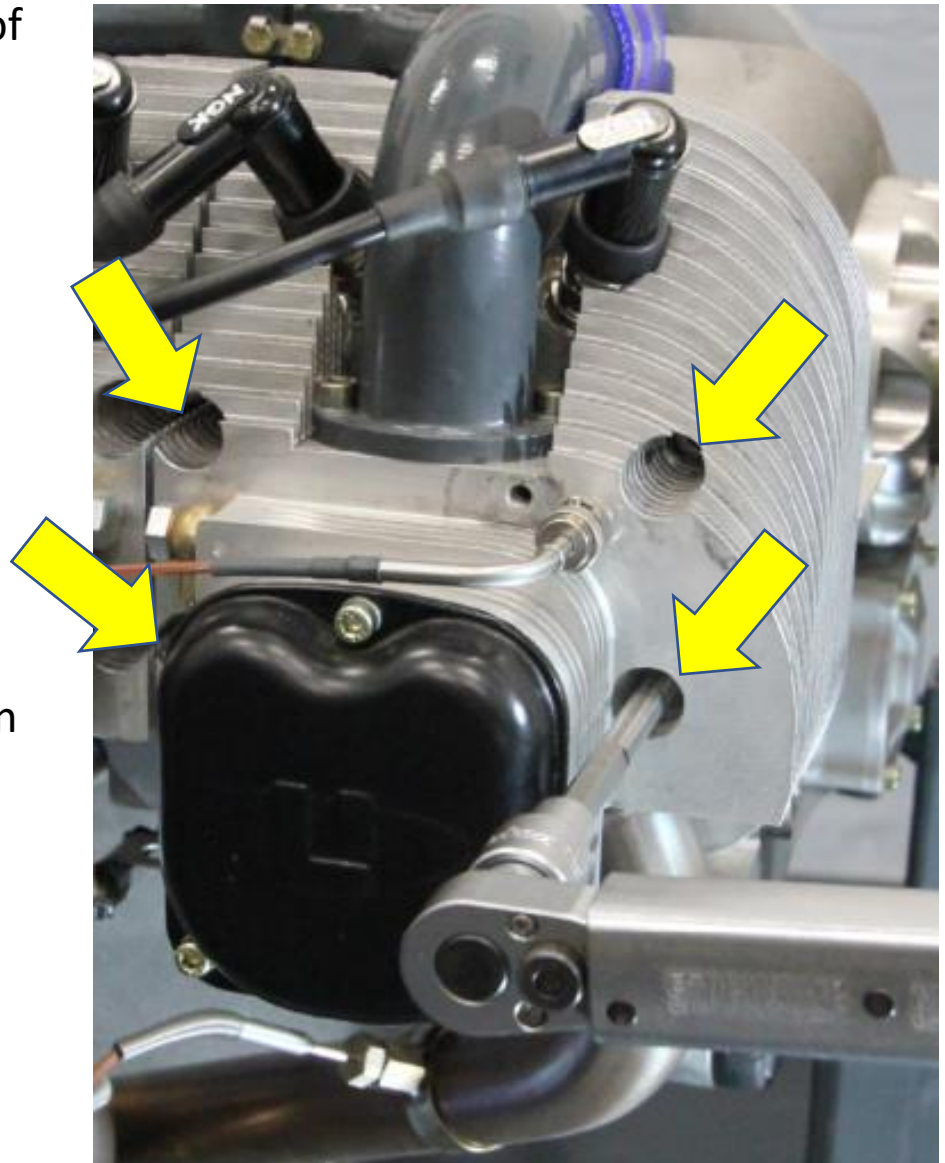

Cylinder Heads…

Tools Needed
T063018 Torque Key (Special tool)
Torque wrench (36Nm)

Set the torque wrench to 36Nm and fit the special tool T063018 Torque Key (supplied with first service kit).

Insert the tool tip securely into the first cylinder head bolt and check torque. Normally this will result in a ‘click’ and NO movement of the bolt.

Repeat with the other three bolts in sequence.

If any bolt needs tightened contact your nearest ULPower Aero Engine dealer for further advice.

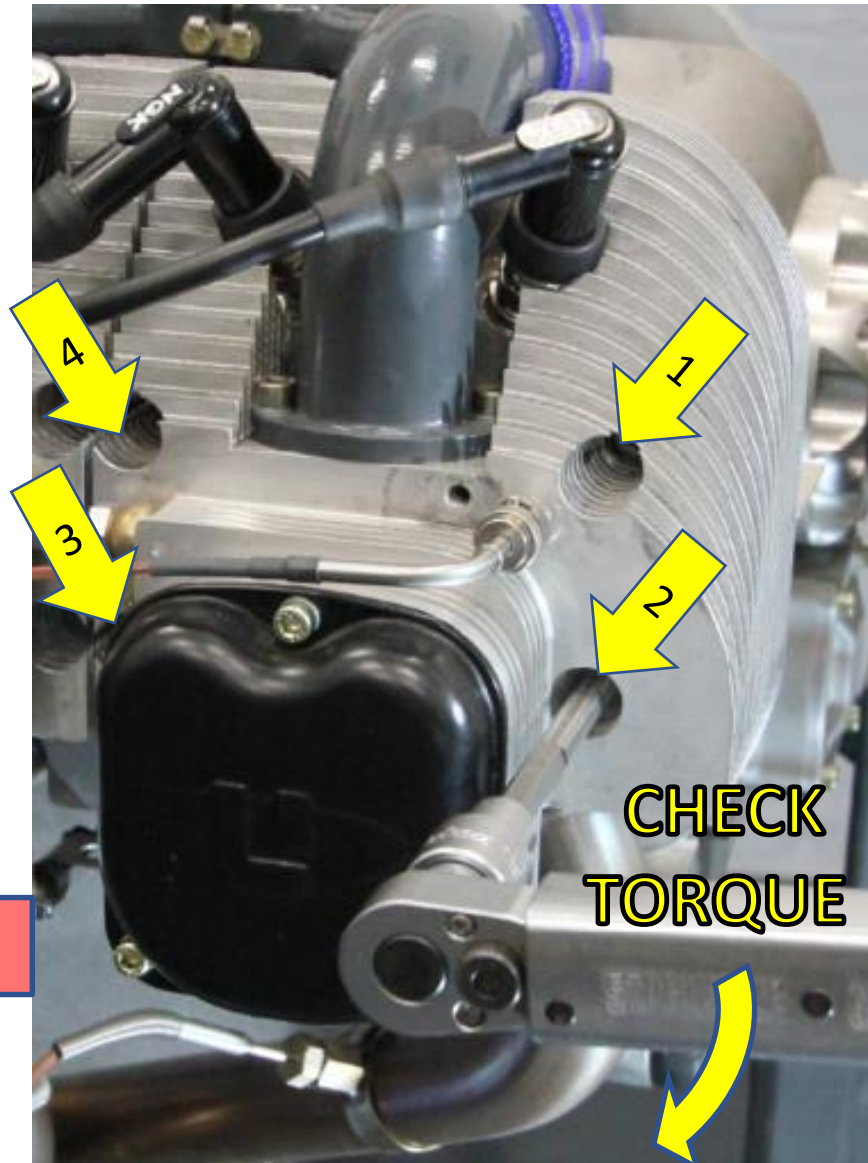

CAUTION: When checking torque, do not loosen first.

Rocker/Tappet…

Tools Needed

3mm & 5mm Allen Key
Feeler Gauge (0.1/0.15/0.2mm)
Torque wrench (20Nm / 6Nm)
13mm ring spanner
[O ring(s) S1100020]

Checking the Rocker/Tappet (lifter) clearance is a simple procedure that allows for adjustment of the correct valve opening and proper functioning of your engine. It is also an early warning system to identify excessive wear and can be likened to an ECG (EKG) as part of a medical examination of your engine, and the opportunity to adjust for any wear or bedding in that may occur.

In the early hours of operation, it is perfectly normal for adjustments to be needed. Over time, these adjustments should become smaller and in many cases you may find it unnecessary to adjust at every service. All the same, checking and recording findings provides insight to your engine as part of your planned maintenance.

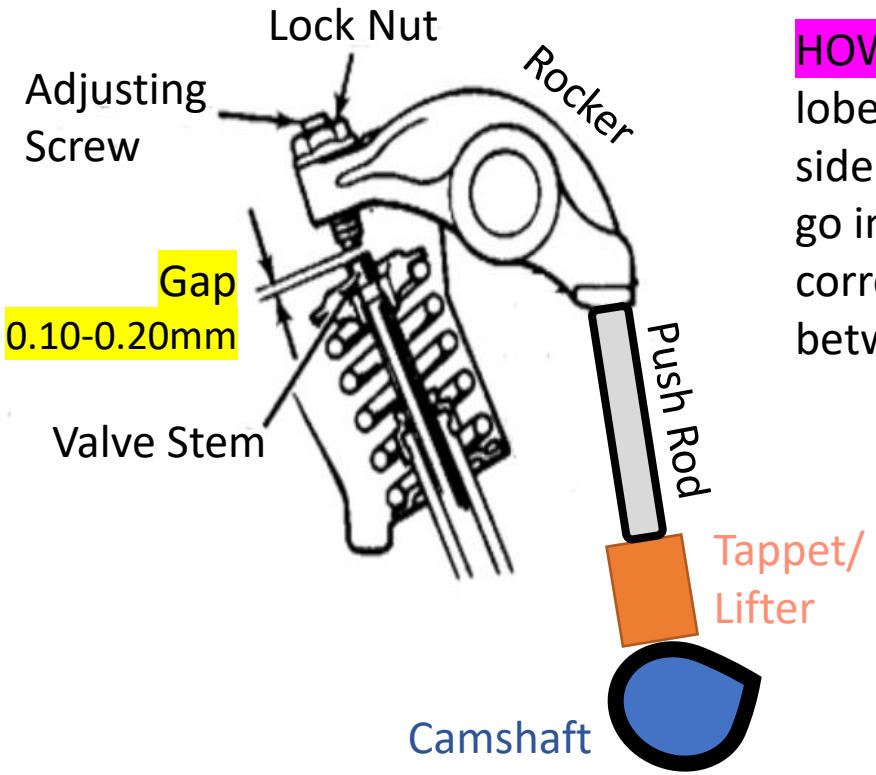

HOW DOES IT WORK? The PUSH ROD is moved by the tappet/lifter as the cam lobe on the CAMSHAFT pushes it, moving one side of the rocker arm. The other side then pushes on the valve stem (either inlet or exhaust) to open for fuel/air to go in or exhaust gasses to get out. The correct gapping allows for smooth and correct operations. Gapping must be done at when BOTH valves are closed between the rocker arm and the valve as shown left.

CAUTION!! As part of this procedure you will be turning the propeller. Make sure the ignition switches, master and ECU are all OFF before moving the prop by hand.

Rocker/Tappet…

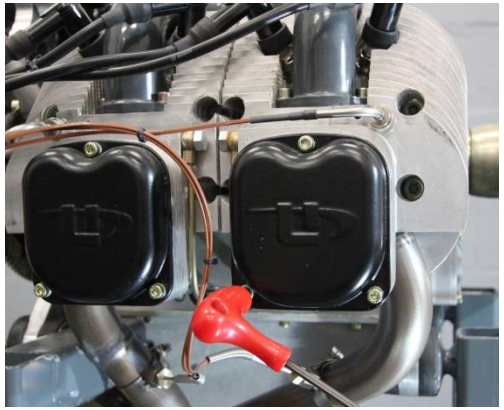

1. On a cold engine (>10C and <25C) remove all the rocker covers. Make a note of which cover goes where (you may use an indelible felt marker such as a 'Sharpie' to label the inside with the cylinder number, after wiping the oil away)

Unscrew all three bolts on each valve cover with a 4mm Allen Key. You may need to gently 'knock' with a soft hammer the edge of the cover to release it. Do not damage the gaskets.

Verify Rocker assembly, etc. has had proper lubrication. Look out for colour changes that could indicate bad lubrication and/or over heating.

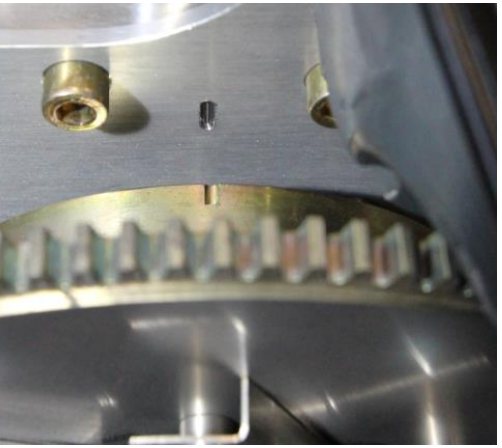

2. Turn the prop until the locator marks align at the rear of the engine. (the air filter has been removed in this image for clarity). At this point one of the cylinders has both valves closed and ready for gapping.

At every half and full revolution of the engine (back to this position) ONE of the pistons will be ready for gapping.

Look at the rockers at each cylinder. Some are 'equal' some have exhaust or inlet valves depressed.

Continue to turn the prop, if necessary, until rockers are even at cylinder 1 <u>and</u> 'free to move' (tumbling). We suggest starting with Cylinder 1.

Rocker/Tappet…

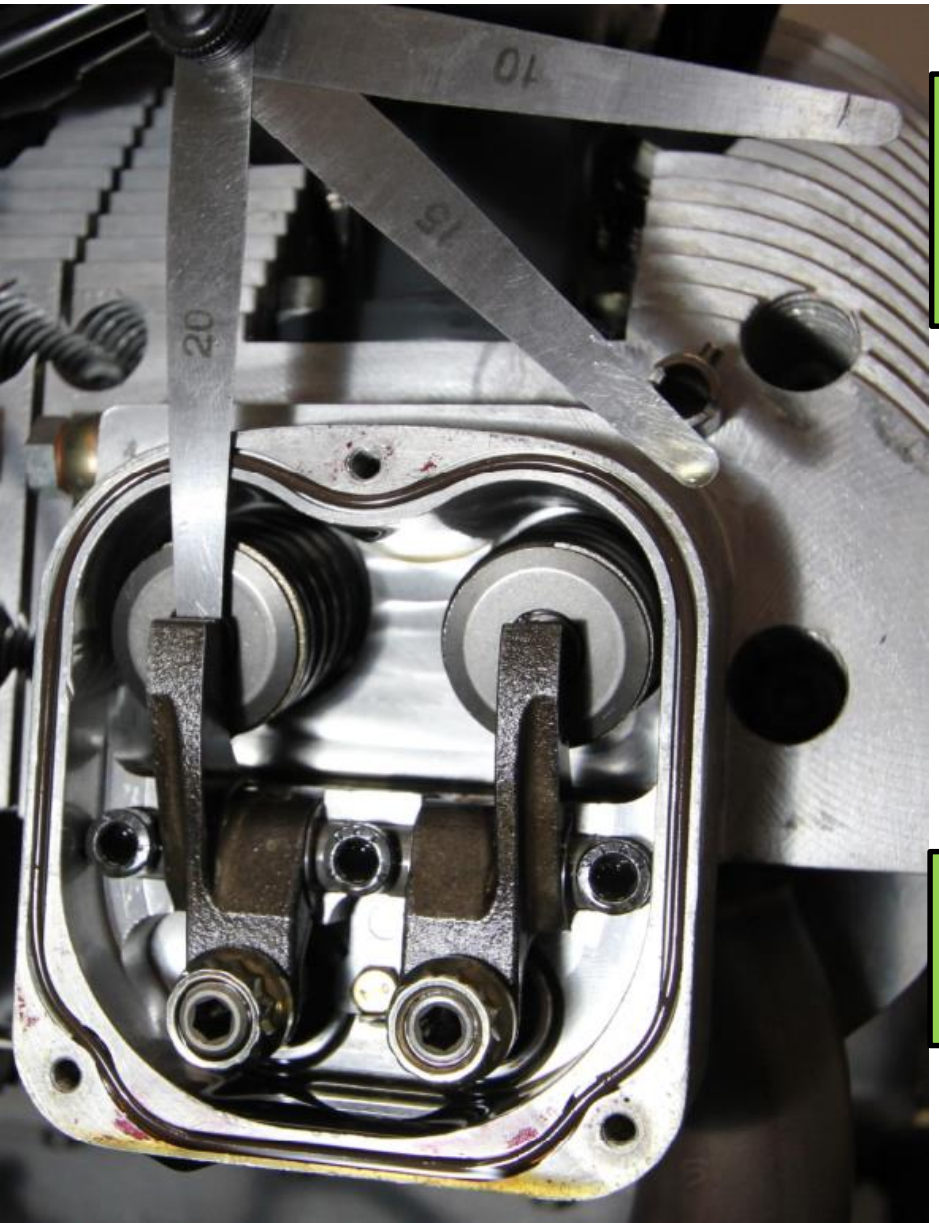

HINT: To check that you are ready for gapping on the cylinder you are looking at, rock the prop back and forth. If the rockers DO NOT move on the cylinder you are working on then you are ready for gapping. If they are moving then you are NOT! (see videos of this at ULPOWER.NEWS)

3. Check clearance on each tappet by sliding a feeler gauge in.

If the 0.20mm slides in – there is too much clearance.

If the 0.10mm will NOT slide in - there is too little clearance.

If re-setting, set to 0.15mm.

HINT: If you lay out your feeler gauge as shown left you can check really quickly with the 0.20 and 0.10 to make sure that the .10 DOES fit and the 0.20 DOESN'T fit. In the ideal world you are looking for a snug 0.15mm fit.

Rocker/Tappet…

HINT: The adjustment is VERY small, only a fraction of a turn on the Allen key, so try not to make big movements and keep tools and hands stable.

4. To adjust clearance, place a 13mm ring spanner over the lock nut and a 5mm Allen key in the adjustment screw. Keeping the Allen key very still, loosen the lock nut.

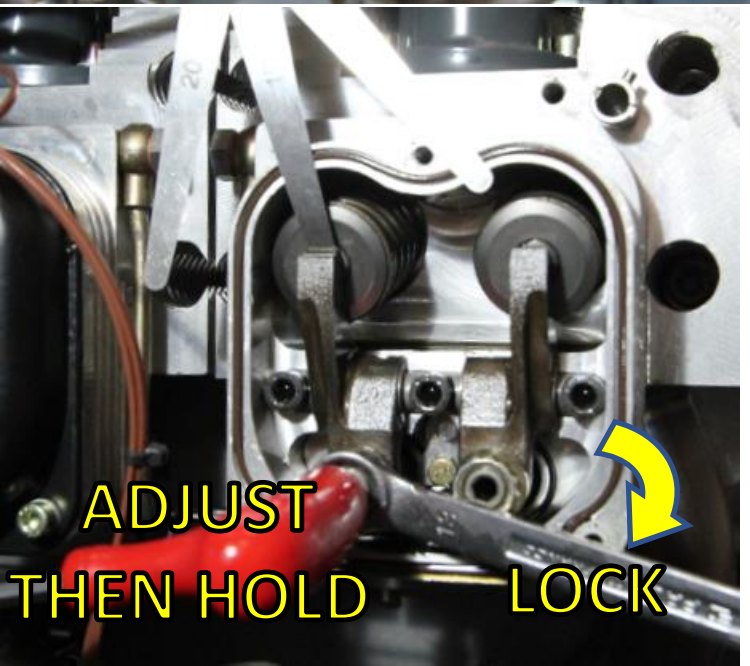

5. Place the 0.15mm feeler gauge in the gap and adjust using the Allen key. Then HOLD the Allen key really steady whilst you ‘nip’ the locking nut in place WITH the feeler gauge in situ. Do NOT over tighten. Just enough to hold it whilst you torque the lock nut (see next step)

Rocker/Tappet…

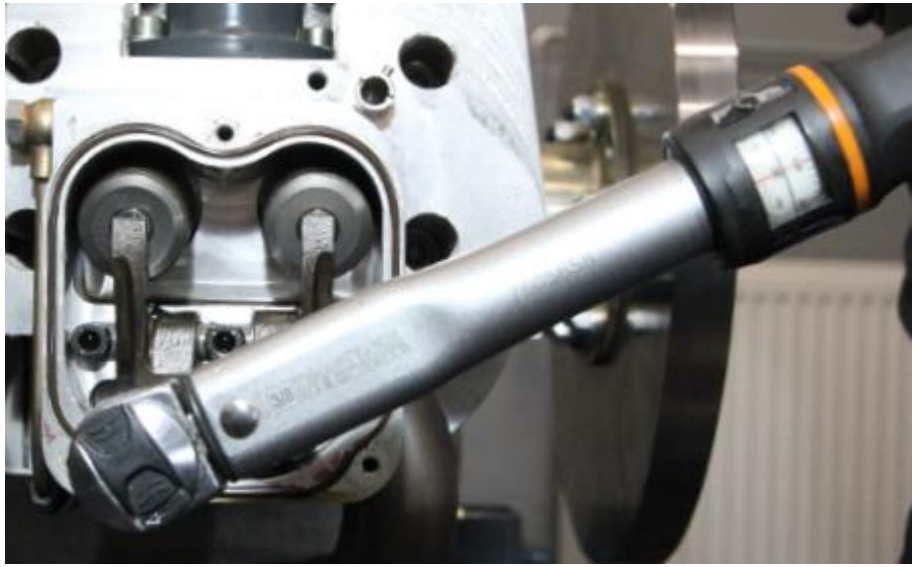

6. Using a Torque wrench tighten the lock nut to 20Nm (14.7 ft lbs).

7. Use the feeler gauge to check that the adjustment is correct AFTER torqueing. If not correct, redo.

8. Turn the prop through 180/360 degrees from current position (anti-clockwise when facing the prop. on a standard engine) to put the next cylinder ready for gapping.

Repeat until all cylinders have been checked/set. **ALWAYS** check that both rockers are not moving and 'tumbling' before gapping. Record clearances and adjustments.

HINT: If you have not done this before ask an experienced engineer/mechanic to assist you…
DO NOT OVER-TORQUE!!!

Useful information

Firing order 4 cylinder: 1 – 3 – 2 – 4
Firing order 6 cylinder: 1 – 4 – 5 – 2 – 3 – 6

Rocker/Tappet…

9. Before closing valve covers ensure that the the O-ring is in good condition (replace if necessary), that it is completely seated in it's groove, in the correct position and that the surface is clean. Apply a little clean engine oil to O-ring if dry.

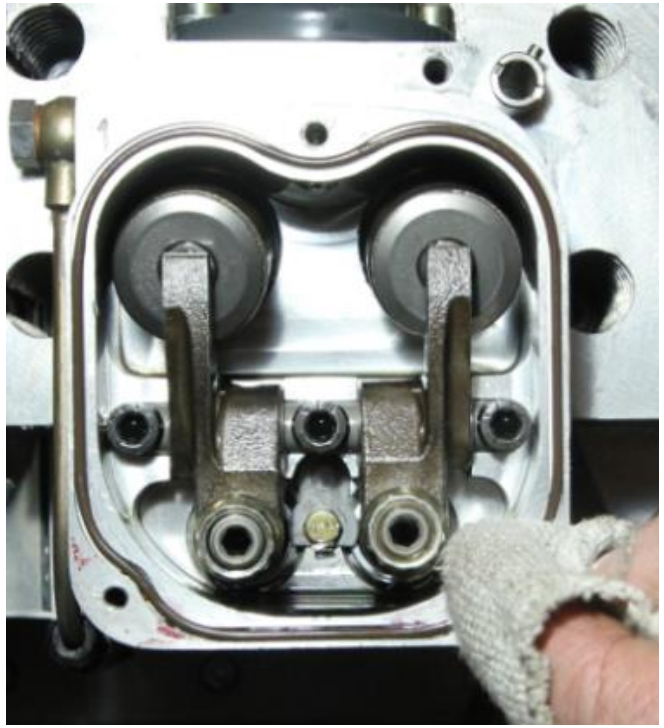

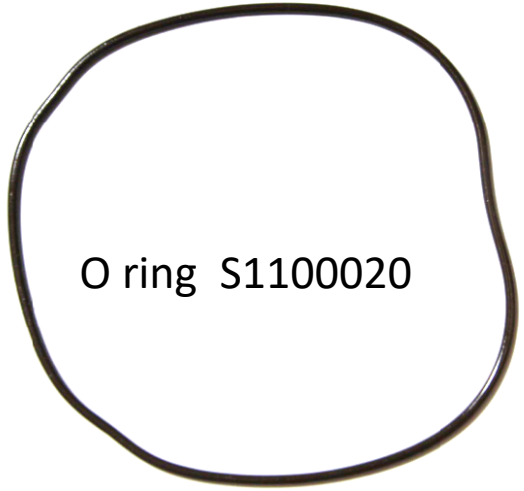

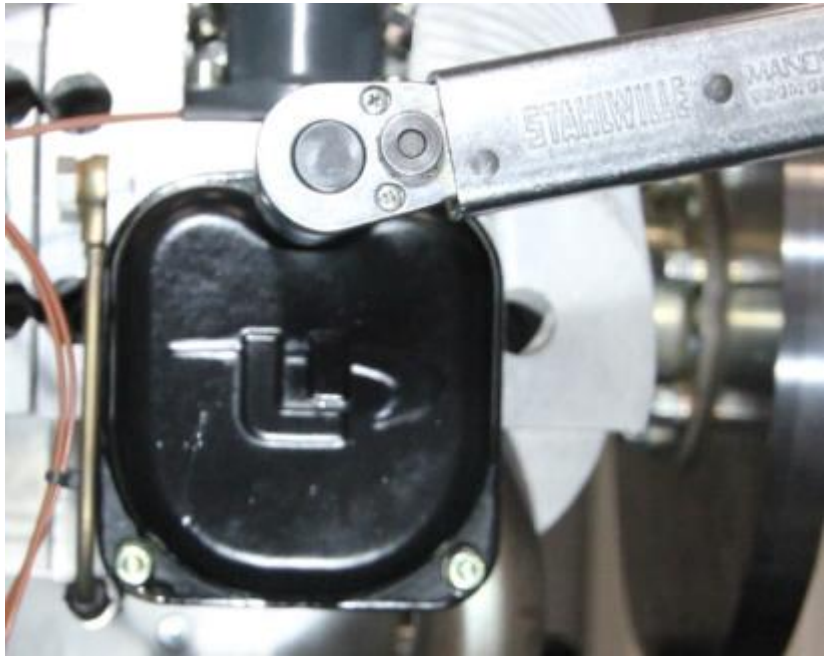

10. Replace rocker covers to the relevant cylinders and tighten valve cover cap screws M5x16mm to 6 Nm (4.5 ft lbs). Bring all three screws to contact before torqueing

CAUTION: When the same tappets are in need of adjustment every time maintenance is performed, it can be indicative of a developing problem. Contact your nearest ULPower dealer who may inspect the valve train for abnormal wear. Do check for proper lubrication and clogged oil lines.

Throttle…

Check that your throttle cable has no signs of fraying, kinks or compromised travel. Ensure that the installation allows full and free movement and that all attachments are appropriate for your installation.

There are many different installations for throttles. You may want to take a ‘reference picture’ of how it should be for your records and to compare to during servicing.

Sparks…

Tools Needed
Heat transfer paste Wacker P12
16mm Spark plug socket (with rubber insert)
Torque wrench (21Nm)
New Spark Plugs (Bosch FR 5 DTC)

As in any modern automobile, sparkplugs do NOT normally need cleaning. It is generally better to REPLACE spark plugs unless there is an exceptional reason to clean them.
(If you must, use a plastic brush and solvent. Dry well and inspect before re-use at your own risk.)

These spark plugs consist of 3 electrodes round the core. The electrode gap cannot be changed. Do not try to bend the electrodes!

Note: *Operation with leaded fuels (e.g. AVGAS 100LL) can result in increased wear of the spark plugs. Reduce renewal intervals accordingly.*

NOTE: Only use **Bosch FR 5 DTC** spark plugs. Use of incorrect spark plugs may result in ignition problems, electrical disturbance and other engine damage.

Spark plugs…

1. Unplug ignition leads (noting positions) and remove old spark plugs with 16mm Plug Socket

2. Before inserting new spark plugs back into the cylinder head, apply Wacker P12 heat transfer paste on the thread – avoiding the last two threads towards the electrode. (shown right)

3. Screw in spark plugs with fingers to seat.

4. Using a Plug Socket (with rubber insert to protect plug) tighten to 21 Nm.

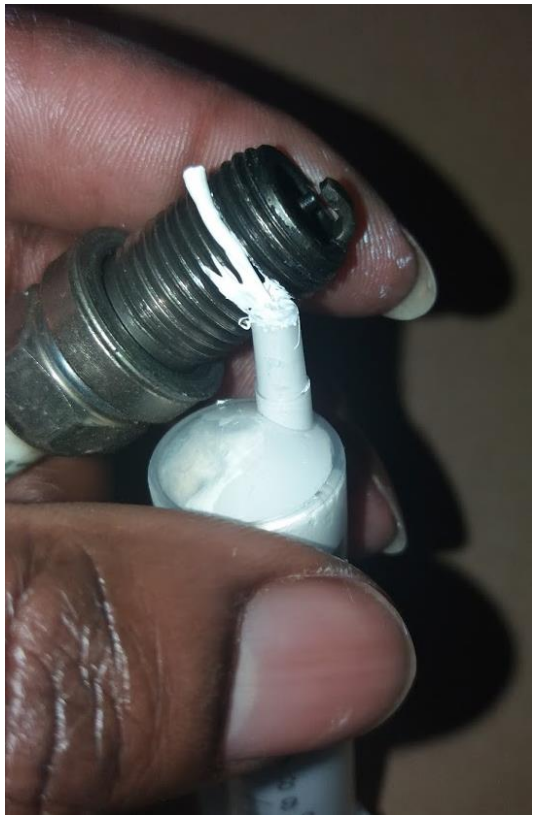

5.Refit ignition leads to the correct plugs. Check connectors are secure.

HINT: Pack Wacker P12 heat transfer paste into a small syringe to apply it more precisely and economically.

Compression…

Compression Check

COMING SOON!

Engine run…

HINT: When doing the engine run make sure to LISTEN to the engine during start-up and when running. For example, leave the headset off during the start-up, and then lift 'one ear' to listen to the engine when running at different speeds. This can be good habit as a pilot too!

The minimum requirement is to 'run the engine' and check for full power / idle and check temps and pressures. However, this is a great time to check all start-up systems too…

For example, a simple way to check ignition and fuel pumps are 'able to work alone' should they have to:-

1. Start engine with ignition 1 and main fuel pump
2. Start engine with ignition 2 and main fuel pump
3. Start engine with BOTH ignitions and auxiliary fuel pump
4. Start engine with BOTH ignitions and main fuel pump

a) Start the engine and run to operating temperature. Smoothly apply throttle to full power. Check temperatures and pressures are within limits. Record oil pressure, fuel pressure and engine speed (rpm). Bring engine to idle speed. Record engine speed (rpm)
b) After engine test run, if replaced, re-torque oil-filter to 15Nm
c) After engine test run, inspect oil level and add oil as necessary to maximum mark.
d) After engine test run, adjust idle speed lever position if necessary. Record new engine idle speed.

Non-Routine maintenance…

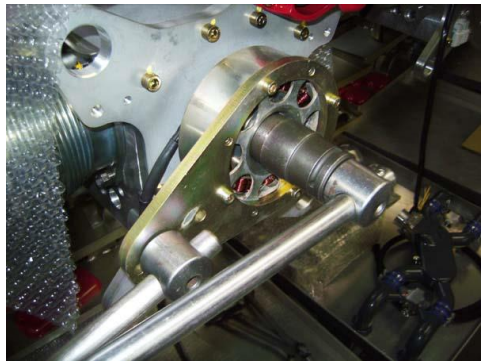

Alternator Flange Replacement

Piston Assembly

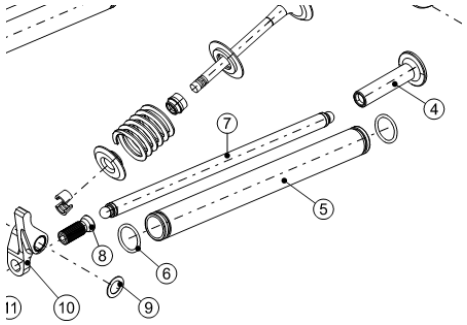

Change O rings in the oil return tubes

Change of oil seal at the alternator of the engine

Change oil seal at the propeller side of the engine

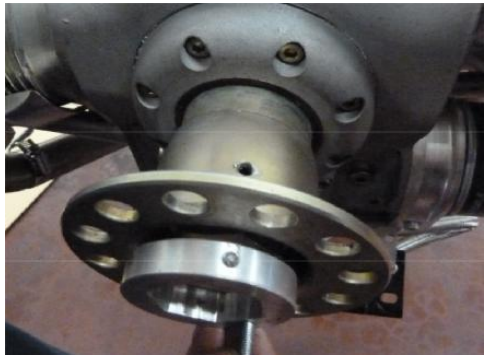

Propeller flange Replacement

Routine maintenance

Alternator flange replacement…

Tools Needed

T063002 Alternator tool
Allen Key
Torque Wrench (280Nm/10Nm)
Breaker bar(s)
Spanners

REMOVAL PROCEDURE

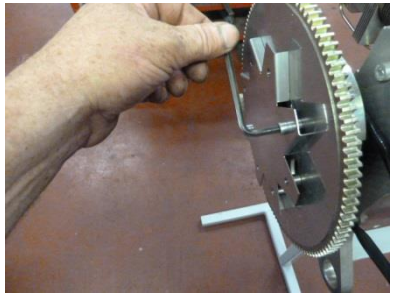

1. Unscrew the 8 cap screws with an Allen key to remove alternator fan and starter ring gear. (NB Keep each pair of NordLock washers under the cap screws together.)

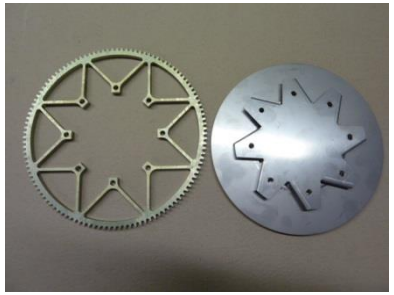

2. Keep starter ring gear and fan facing in the same direction as it was assembled.

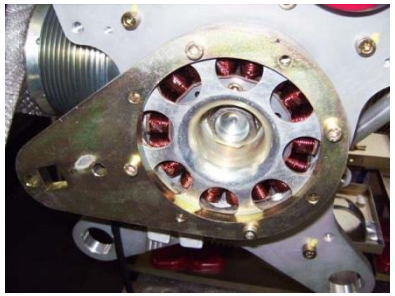

3. Attach the alternator flange holder tool T063002 to the flange with 4 bolts M6X16.

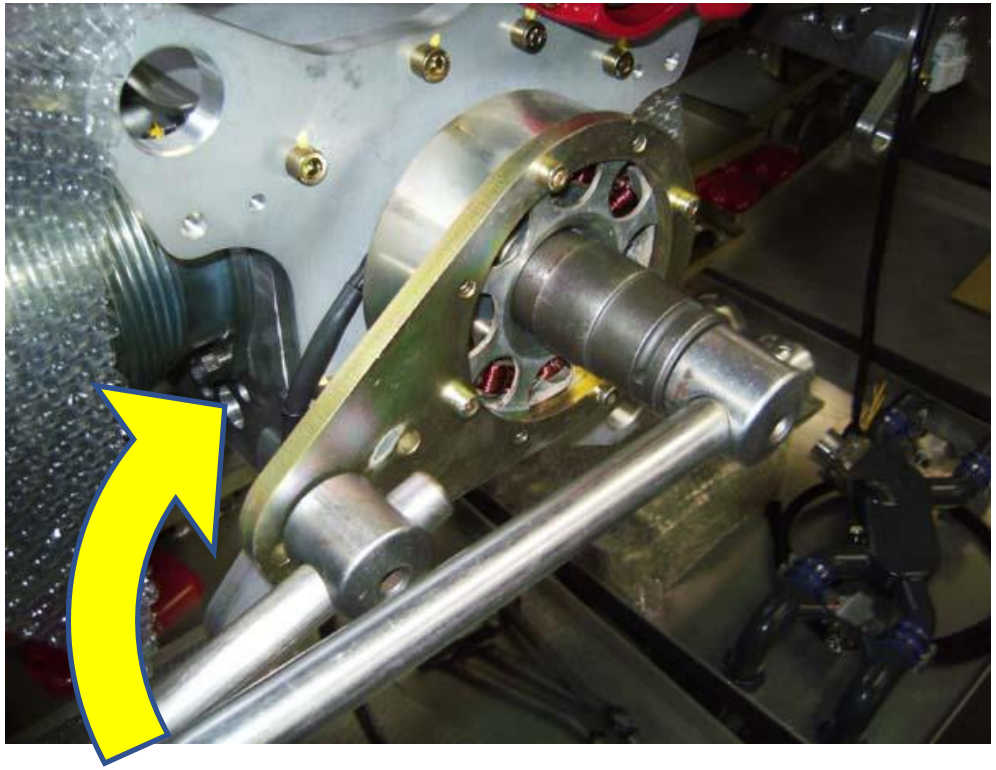

4. Hold the alternator flange in place while unscrewing the central bolt. Note that the bolt has left hand thread and so you have to turn it clockwise to undo it! Keep the bolt aside.

Alternator flange replacement …

5. Remove the holder tool and insert the bolt that came with the tools. Remember you have to turn it anticlockwise to screw in the left hand thread. It does not have to be tight; just hand screw it in.

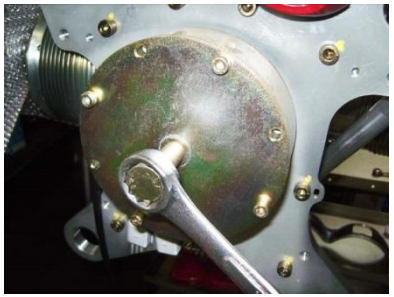

6. Attach the alternator flange pulley removal tool with the **4 bolts M6 X 16** and wind off the alternator flange by turning the bolt (clockwise).

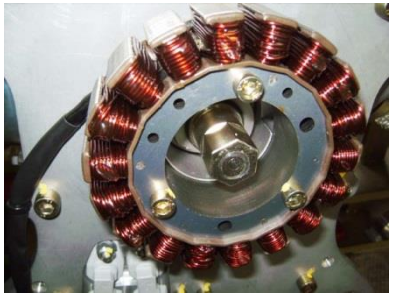

7. Unscrew the central bolt (clockwise).

HINT: Take your time and be ready to manage a magnetic force when you are working on this. Place all items on a clean sheet and keep loose magnetic materials away from the work area (nuts/bolts/washers/etc!)

If you are now changing the rear oil seal CLICK HERE

Alternator flange replacement…

HINT: Make sure you have cleaned all surfaces before applying Loctite!

INSTALLATION PROCEDURE

A. Put some Loctite 266 (RED) on the central bolt (27) thread.

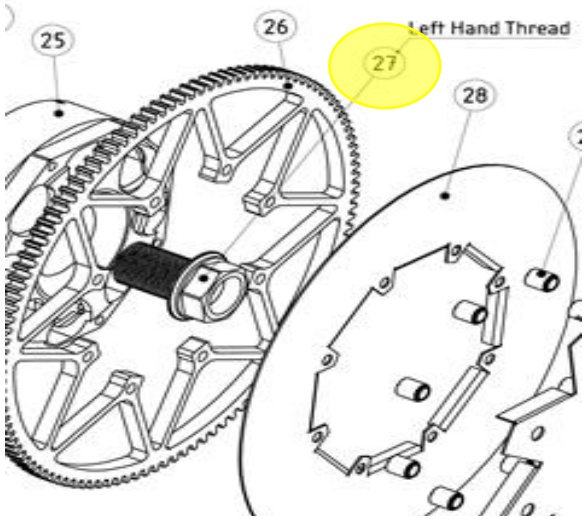

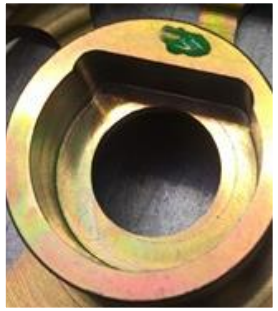

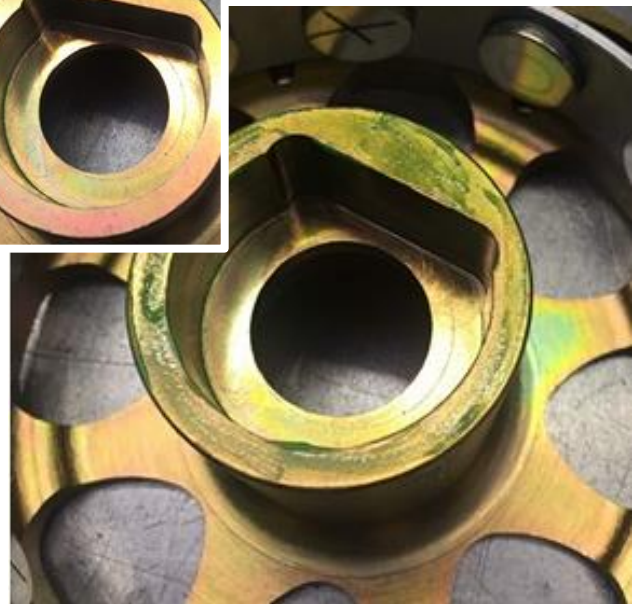

B. Put a couple of drops of Loctite 573 (GREEN) **on the face of the (new) alternator flange and spread using a clean spreader** to seal against oil leaks.

NOTE: You will have to turn the alternator a bit so that the flat faces on the flange and crankshaft mate and it will 'click' in. Do not hammer the flange over the crankshaft; just wind it up with the central bolt (anticlockwise).

C. Slide the (new) alternator flange over the crankshaft. Be careful not to get your fingers stuck as the magnets will attract the flange to the alternator stator.

Alternator flange replacement…

INSTALLATION PROCEDURE (cont.)

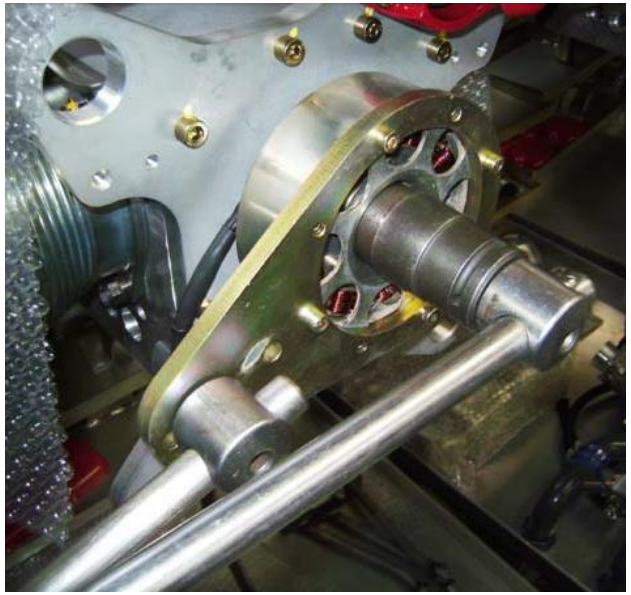

D. Torque the central bolt to 280Nm (anticlockwise) while holding the flange with the holder tool as used to unscrew the bolt in step 3 & 4

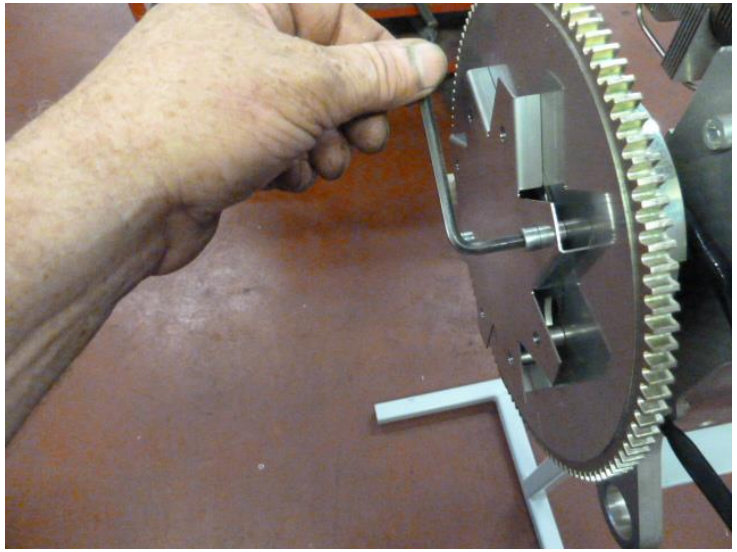

E. Remove the holder tool and collect all 8 cap screws together with the NordLock washers. The washers are in pairs and the side with the larger steps are faced towards each other.

F. Reassemble the alternator ring gear and alternator fan with the cap screws and NordLock washers.

Torque the cap screws to 10Nm.

Piston Assembly…

A. Fitting the conrod to the piston

1. Bend clips as shown, and insert in groove piston using a screwdriver, slowly push the clips completely in the groove

2. Apply oil to the piston hole for lubrication.

Then slide the piston pin through the piston and conrod and insert the retaining clip

Piston Assembly…

B. Assembling piston rings to piston

1. Carefully install the supporting ring with bump (shown left) using a tool (shown right). Ensure that the bump is located under the piston pin (bump 'up' towards the piston pin (shown below). The bump is to avoid the supporting ring form turning around in the groove.

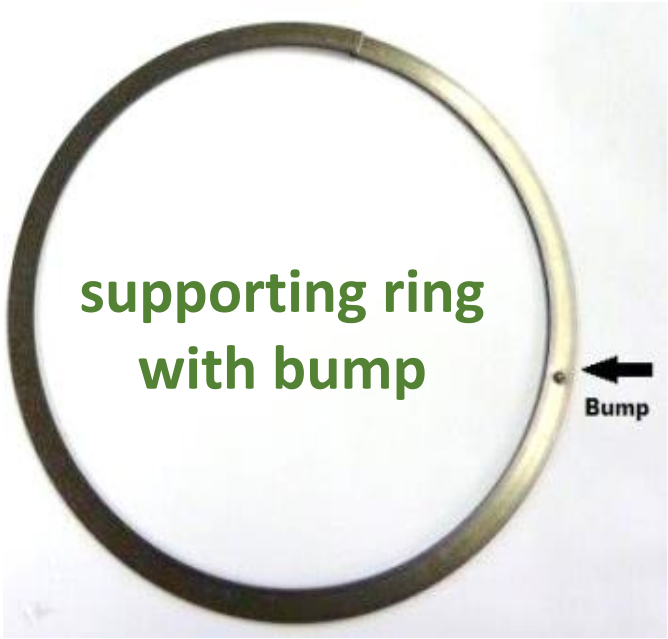

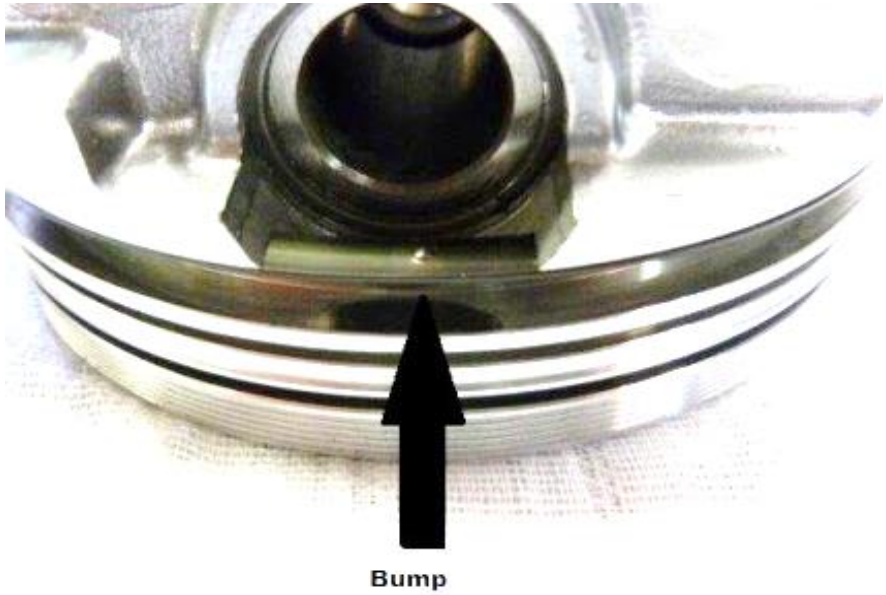

Piston Assembly…

B. Assembling piston rings to piston

HINT: Piston rings can break during installation and should only be installed with piston ring pliers. We recommend the use of FACOM 751.T or similar.

2. Install the oil scraper above the supporting ring in the same groove

3. Install the two supporting rings without bump – they are the same. Each ring on both sides of the scraper ring.

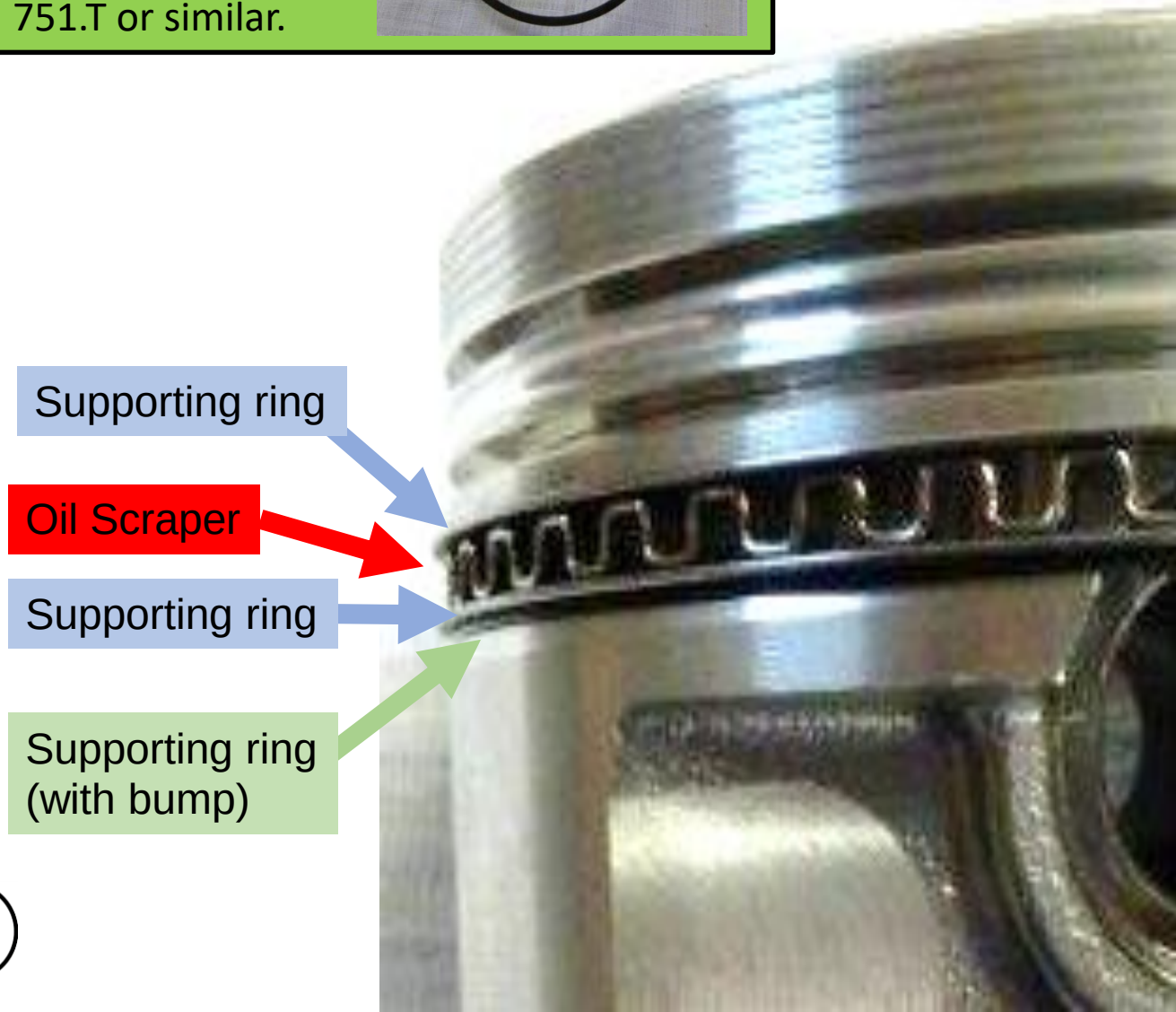

Piston Assembly…

B. Assembling piston rings to piston

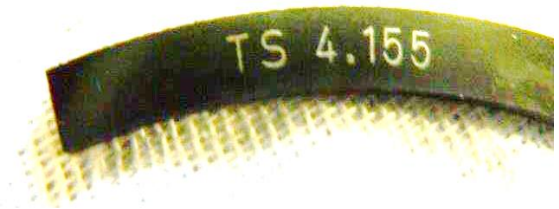

4. Install piston ring 1 in the MIDDLE groove
NOTE: piston ring 1 is the ring with the bevel on the opposite side of the identification number. Install the ring with the identification number to the upper side of the piston (bevel is installed in the direction oil scraper)

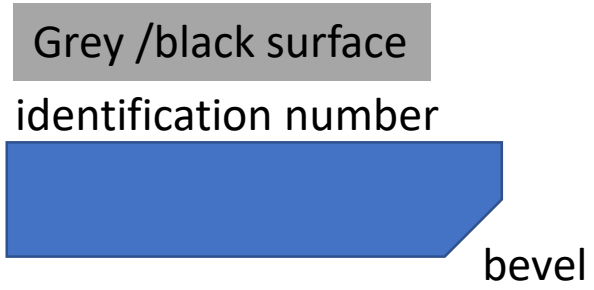

5. Install piston ring 2 in the UPPER/TOP groove.
NOTE: piston ring 2 is the ring with the bevel on the side of the identification number.

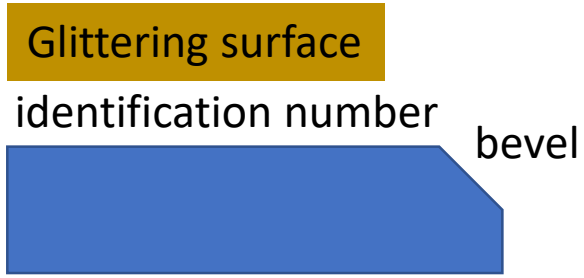

Change O-rings in the oil return tubes…

NOTE: Use the latest Parts catalogue as a guide and for torque values. Here we have pictures from a UL350 parts catalogue.

1. Unscrew the 3 bolts (11) to remove the valve cover (10)
2. Remove the O-rings (9)
3. Turn prop until rocker arms are in neutral position (both valves closed)
4. Unscrew the 3 bolts (12)
5. Remove the complete rocker axe (13) with rockers and adjusting screws
6. Glide both pushrods (7) out of the tubes (Mark them to know which pushrod was on which side (left or right), orientation - and from which cylinder)

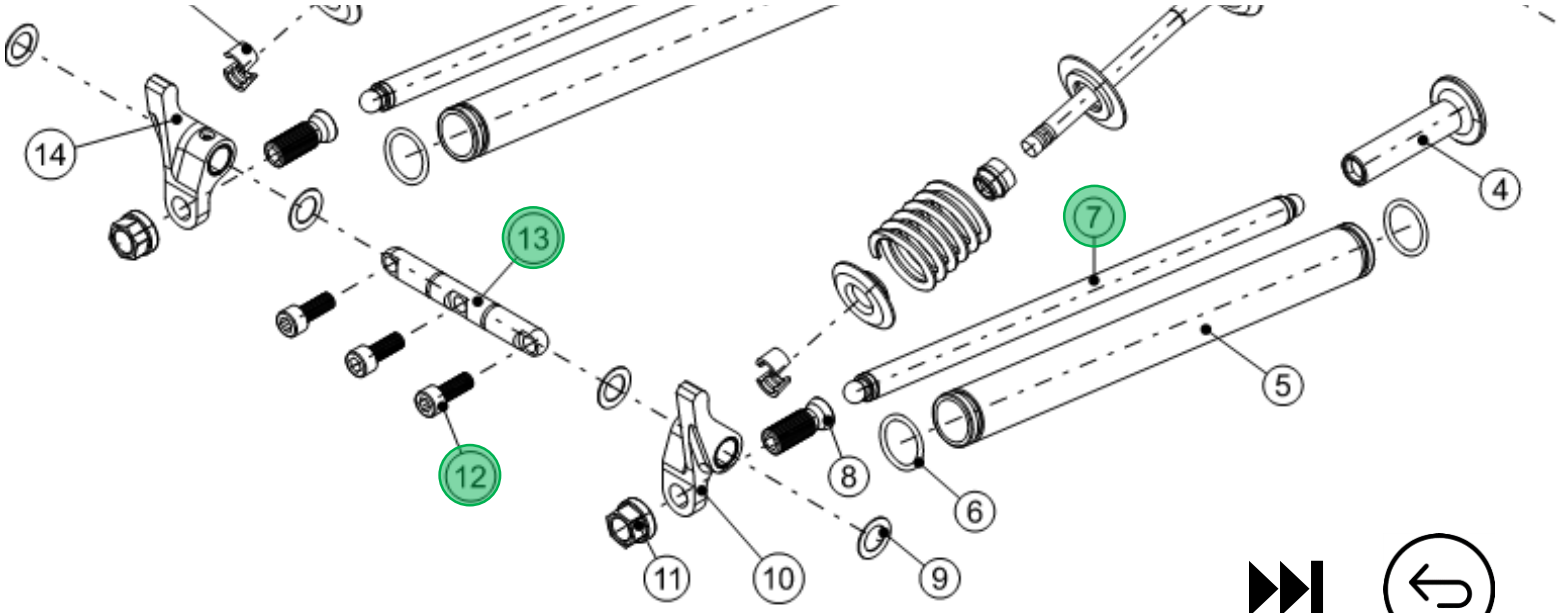

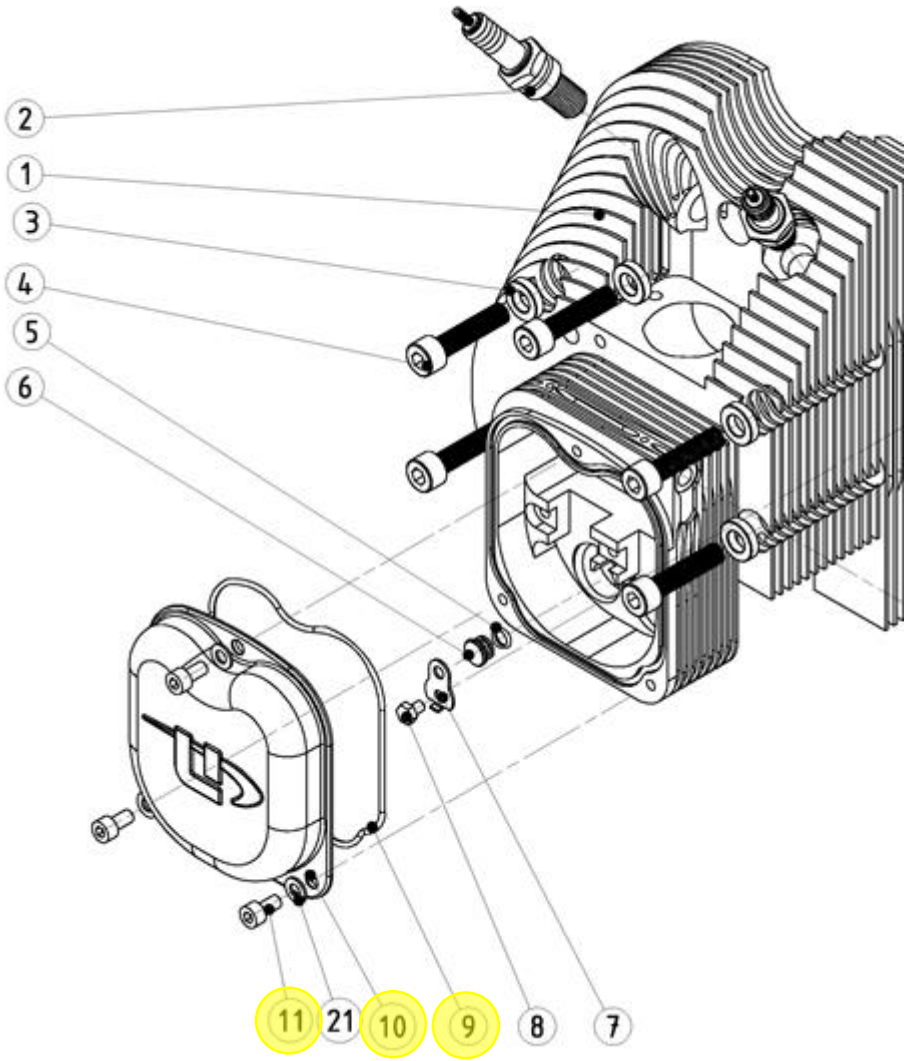

Change O-rings in the oil return tubes…

7. Use screwdriver to bend the locking plate (7). Then unscrew screw (8) and remove locking plate (7).
8. Now you can slowly slide out the tubes (5) of the crankcase and remove the O-ring (6) from the tube (side engine casing)
9. Take out the tube completely from the cylinder head.
10. Carefully clean the seat (hole) in the crankcase and cylinder head.
11. Remove second O-ring from the tube
12. Install the new O-ring on the ‘rocker’ end of the tube
13. Slide the tube (side without O-ring first) through the cylinder head hole
14. Install the second O-ring on the ‘crankcase’ end of the tube
15. Put some sealing silicone (S700001 Elring n° 030.790) on both O-rings and glide them carefully into position on the crankcase and cylinder head.

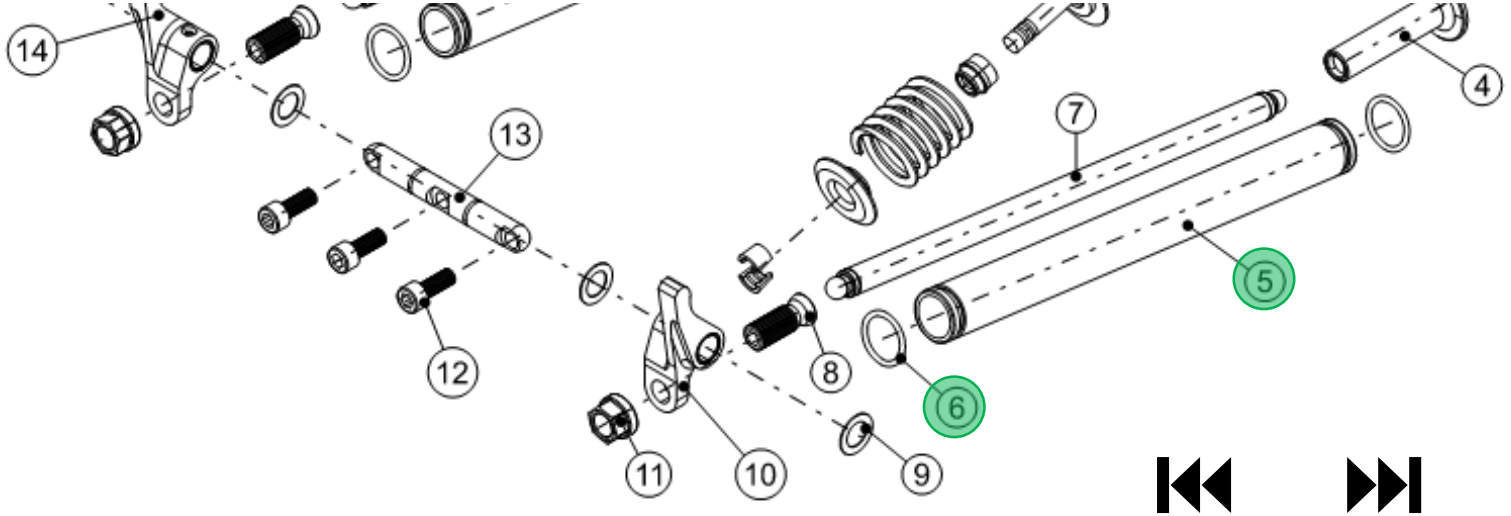

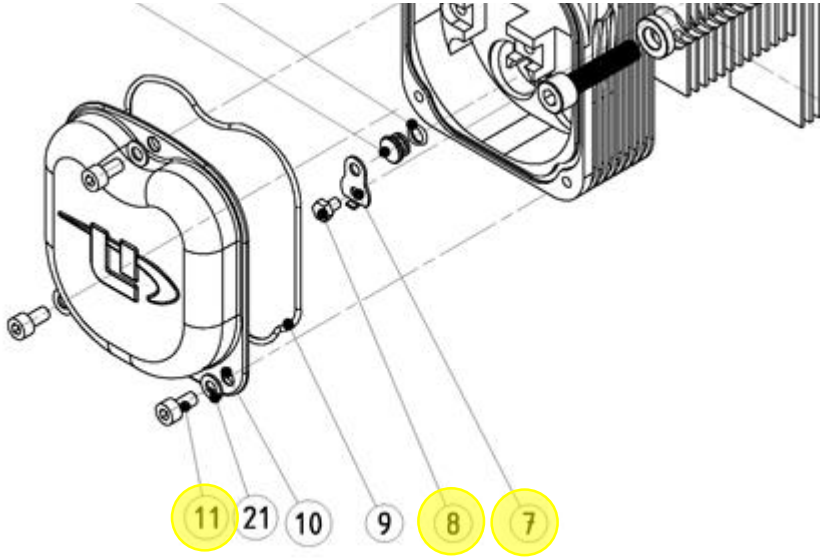

Change O-rings in the oil return tubes…

16. Use a soft hammer and 19mm diameter ‘driver’ to gently knock the tube slowly to the bottom its crankcase seat.
17. Repeat for the second tube
18. Reinstall the locking plate (7) and screw (8) torque to 1.5Nm (or latest value)
19. Bend the locking plate to lock the screw (replace if damaged)
20. Glide both push rods (7) into their respective tubes
21. Re-install the rocker axe (13) assembly ensuring orientation (flat side rocker axe = cylinder head side)
22. Apply a drop of Loctite 266 to the threads and torque the 3 bolts (12) to 12Nm (or latest value)
23. Check condition (replace if necessary)and then carefully reinstall rocker seal sealing O-ring (9)
23. Reinstall valve cover (10) with 3 screws (11) to 6Nm (or latest value)

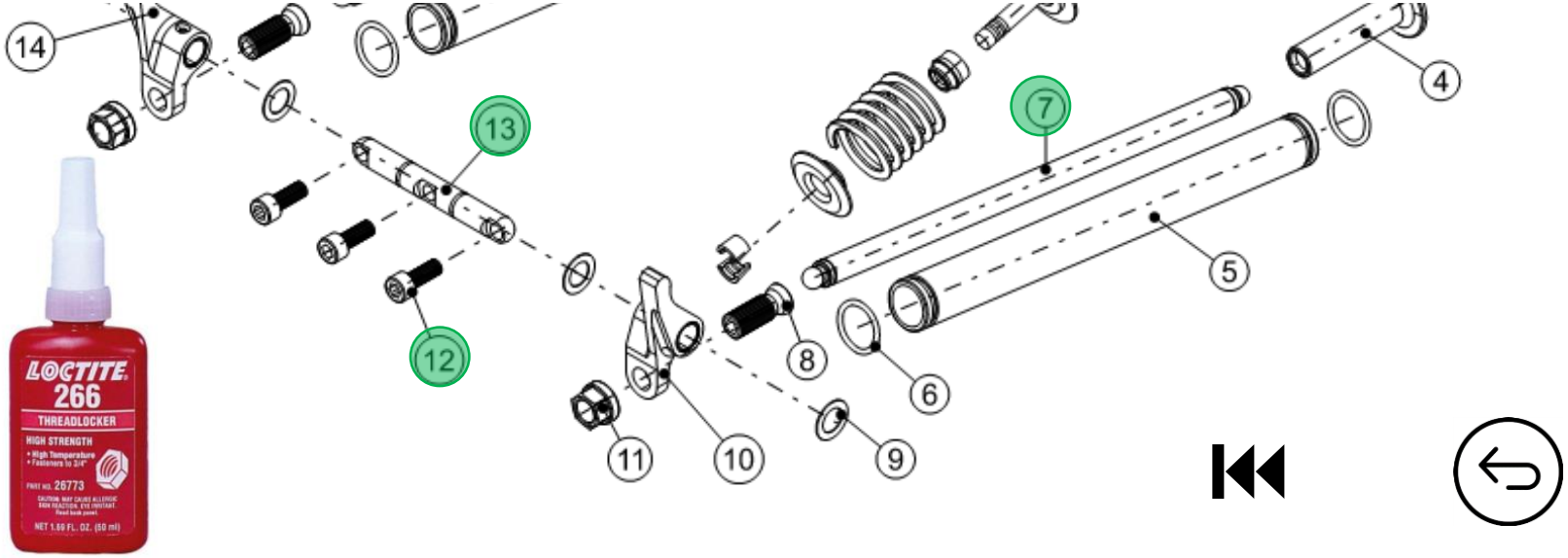

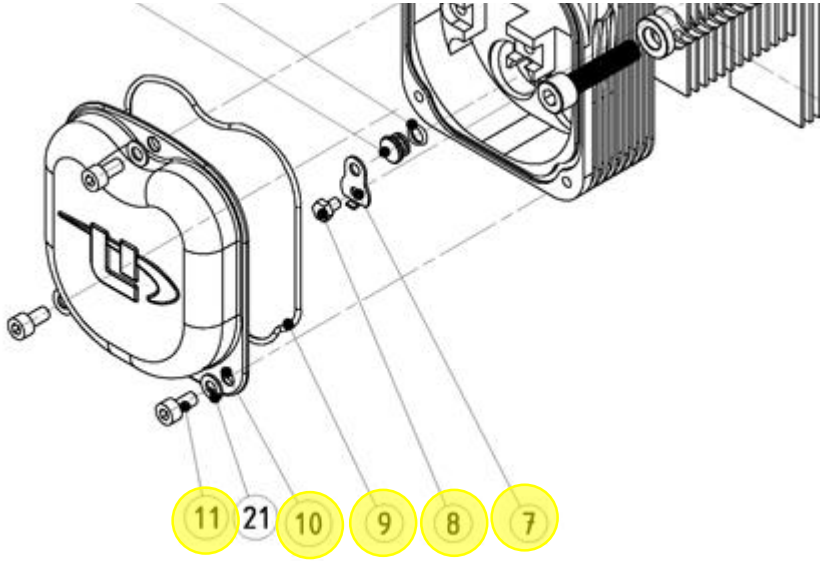

Change oil seal at alternator side of engine…

FIRST: Follow the 'Removal of alternator flange procedure
CLICK HERE FOR INSTRUCTIONS

Mark the position of the wires coming out of the alternator stator.

1. Unscrew the 3 bolts M6 to remove the alternator stator (30A)

Or unscrew the 4 bolts M5 to remove the alternator stator (50A)

Parts needed
S2506207 Oil seal Viton 50 x 62 x 7
S700001 Sealing silicone Elring n°030.790
S1066020 O-ring viton 66 x 2

Tools Needed
T063002 Alternator tool
T063007 Rear oil seal installation tool
Allen Key
Torque Wrench (280Nm/10Nm)
Breaker bar(s)
Spanners

Change oil seal at alternator side of engine…

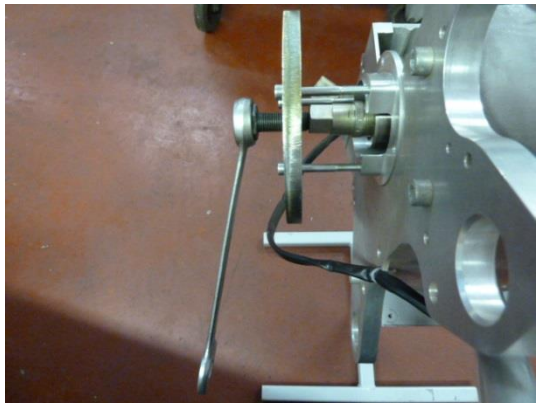

2. To remove the alternator stator spacer, install the alternator flange pulley removal tool and fix it to the spacer.
For the 30a stator use 3 bolts M6 x 60
For the 50a stator use 4 bolts M5 X 60
Don't forget to mark the position from the spacer in the back plate

3. Remove the seal S2506207 from the spacer. Clean the spacer and the engine back plate carefully. (Remove all old silicone).

3a. Clean the crankshaft surface where the seal will slide over during installation to avoid damage to the seal.

4. Install the new seal.

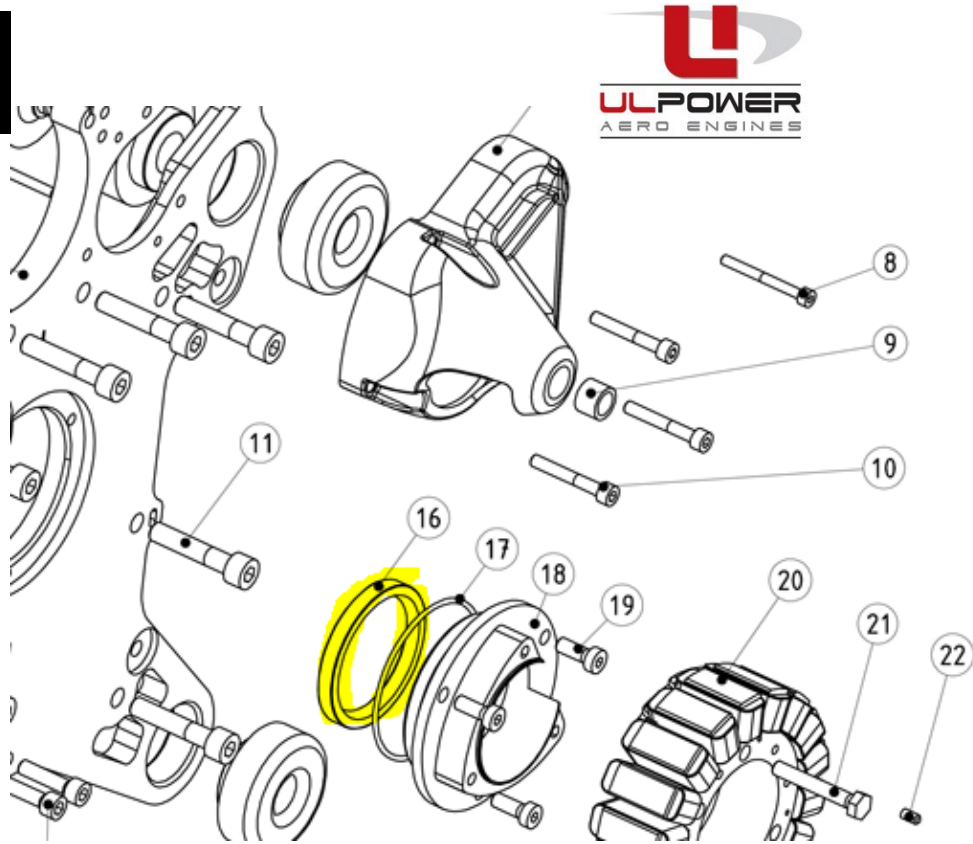

NOTE Make sure that the seal is installed the correct way around!

CAUTION: DO NOT damage the seal during installation.

Change oil seal at alternator side of engine…

5. Put some sealing silicone (S700001) on the surface that will be in contact with the engine mount plate

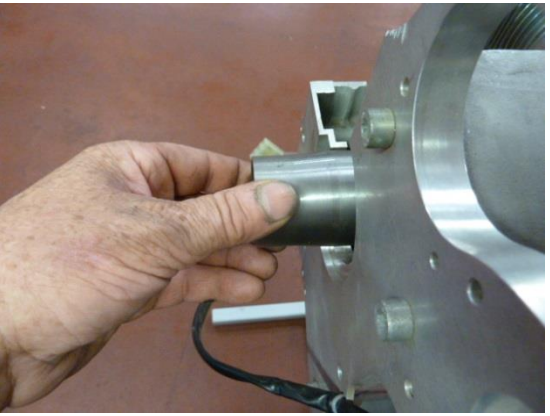

6. Install special tool T063007 over the crankcase gear and put some oil on the external surface. (shown left)

7. Slide the spacer with seal over the tool until the spacer is in the correct place. (shown right)

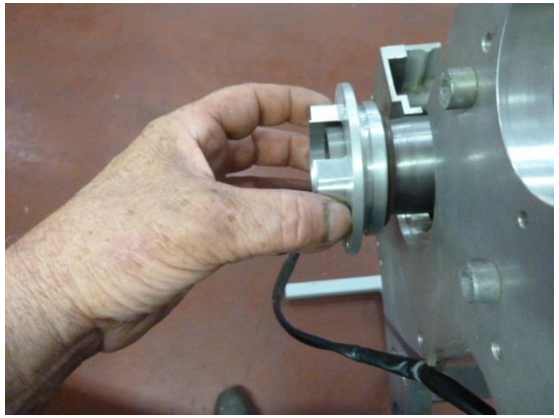

8. Remove the tool and put some sealing silicone (S700001) on each of the 3 bolts M6 (4 bolts M5) and tighten them to 10Nm

FINALLY: Follow the 'Installation of alternator flange' procedure
CLICK HERE FOR INSTRUCTIONS

Change oil seal at prop side of engine…

Parts needed

BE010509 Thrust bearing mount (only when engine serial number is below 120000)

S2607510 Oil seal Viton 60 x 75 x 10
S1052020 O-ring Viton 50x1.78
E021506 Thrust bearing disc
E021504 Thrust bearing retention ring

S700001 Sealing silicone Elring n° 030.790
Loctite 542, 266

Tools Needed

T063006 Prop flange holder
40mm socket
Allen Key 3mm
Torque Wrench (300Nm)
Breaker bar(s)
Spanners

FIRST: Follow the 'Propeller Flange Replacement Procedure' Steps 1-5
CLICK HERE FOR INSTRUCTIONS

Change oil seal at prop side of engine…

REMOVAL PROCEDURE

1. Unscrew the 8 retaining bolts (4)

2. Carefully tap thrust bearing mount (3) with a rubber or soft nylon hammer to loosen the thrust bearing from the casing
(NOTE: sealing silicone has been used during the assembly of the engine.)

3. Remove the thrust bearing mount (3) from the engine.

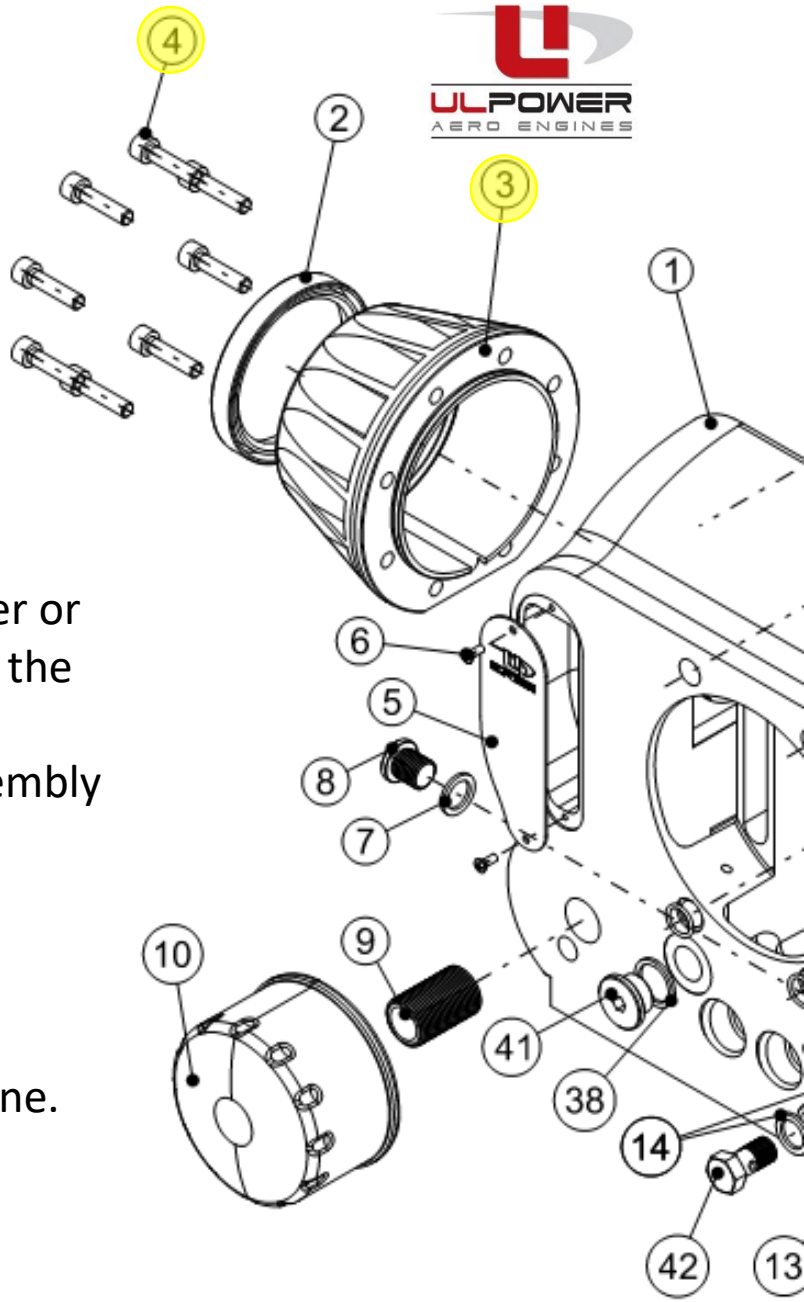

Change oil seal at prop side of engine…

4. Remove the thrust bearing disc (16) from the crankshaft

5. Take the retention ring (7) from the crankshaft

6. Take the O-ring (6) out of the groove in the crankshaft

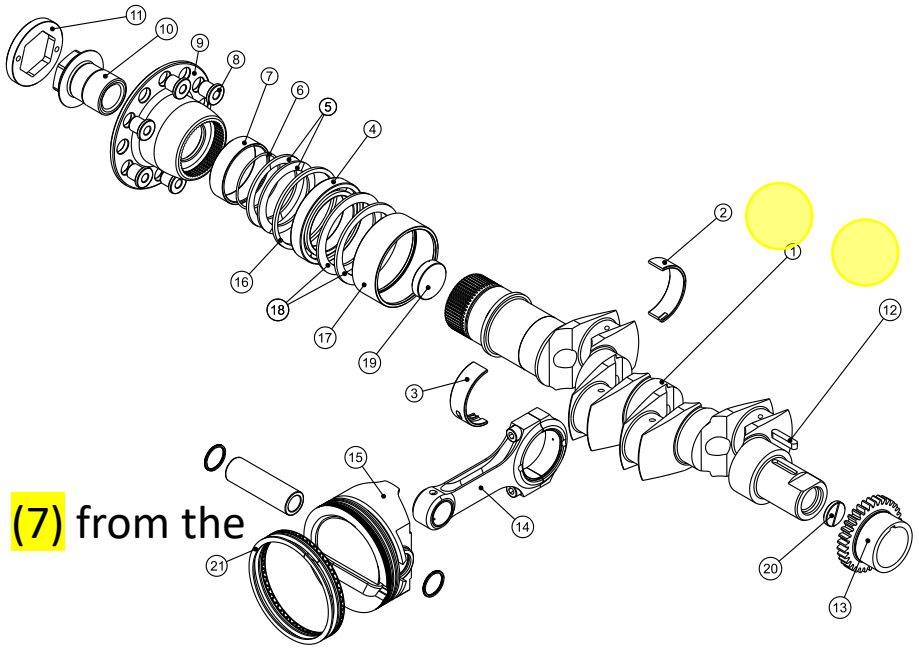

Change oil seal at prop side of engine…

7. Carefully clean the crankcase and thrust bearing house until all sealing silicone is gone.

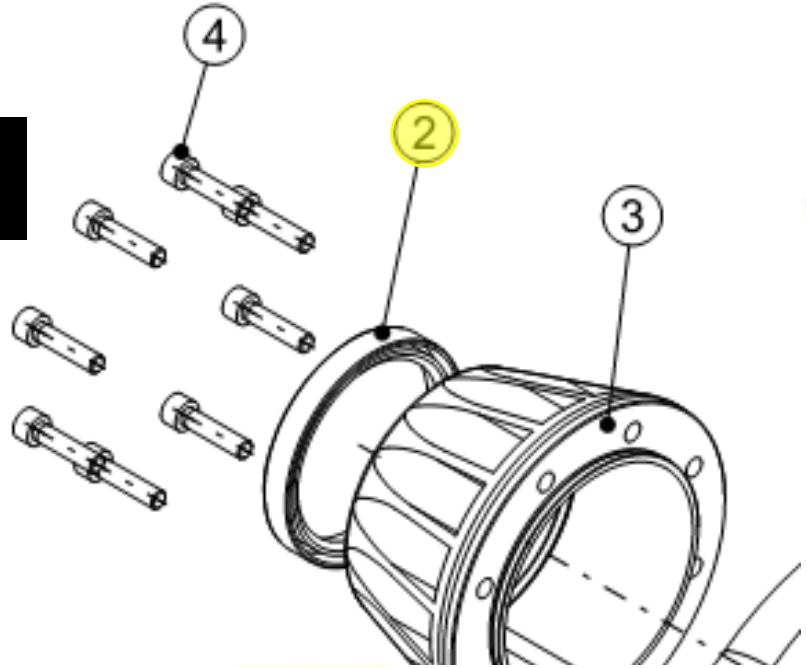

8. Carefully remove the old seal (2) without damaging the aluminium housing.

8a) Smear a little Loctite 5910 onto the outside of the seal and install the new seal (Part number S2607510) (2) using a soft plastic/nylon hammer

NOTE Make sure that the seal is installed this way around!

Change oil seal at prop side of engine…

INSTALLATION PROCEDURE


1. Apply clean oil (you can use the same oil as you use in the engine) on the outer and inner side of the retention ring.


2. Slide the retention ring into the seal from the ‘prop flange side’

NOTE Install the retention ring from the same direction as shown!

Change oil seal at prop side of engine…

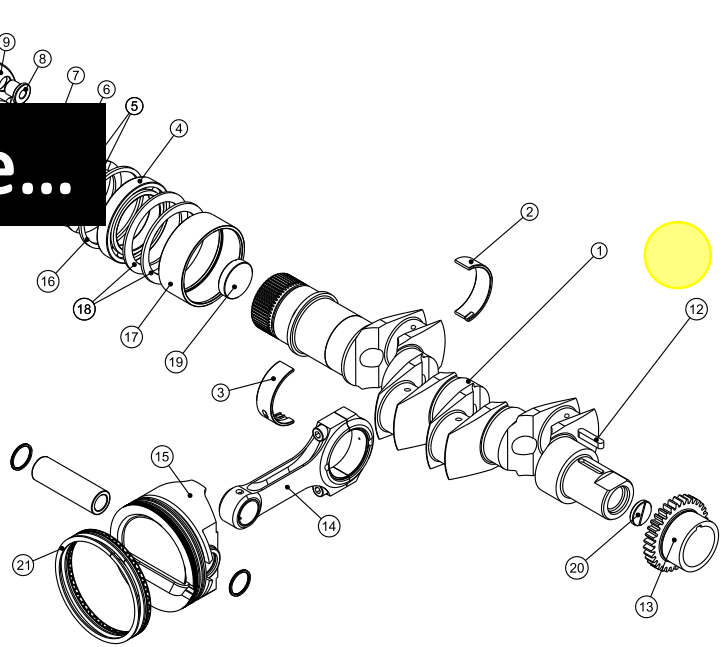

3. Apply sealing silicone (S700001 Elring n° 030.790) onto the housing mating surface

4. Clean the crankshaft and O-ring groove.

5. Oil the O-ring and carefully install

NOTE Always install a NEW O-ring

Change oil seal at prop side of engine…

6. Install the new thrust bearing disc in the housing

7. Push the ring against the collar

8. Carefully slide the housing and retention ring over the bearings and crankshaft

9. Push the retention ring over the O-ring

10. Re-install the 8 bolts and torque to 10Nm – NOTE: there is no Loctite applied to the threads.

FINALLY: Follow the 'Propeller Flange Replacement Procedure' from 6. CLICK HERE FOR INSTRUCTIONS

Propeller Flange Replacement…

Tools Needed
T063006 Prop flange holder
40mm socket
Allen Key 3mm
Torque Wrench (300Nm) / Breaker bar(s)
Spanners

1. Unscrew the M6 screw using a 3mm Allen key.

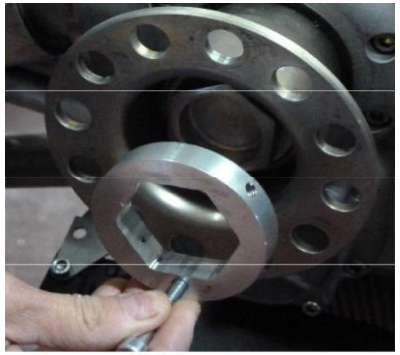

2. Using an M6 bolt, remove the locking plate as shown

3. Attach the propeller flange holder (T063006) to the prop flange with M14 bolts

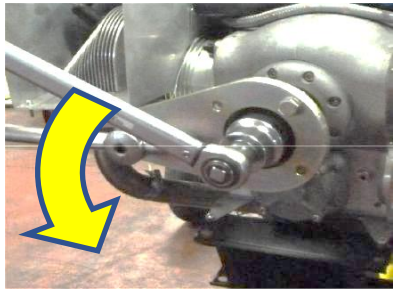

4. Hold the prop flange in place whilst unscrewing (right hand thread) the central bolt (40mm hex socket)

5. Pull off the prop shaft flange from the crankshaft

If you are now changing the front oil seal CLICK HERE

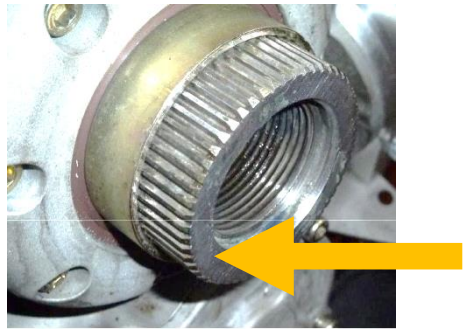

6. Carefully clean the crankshaft paying particular attention to the front face shown here

Propeller Flange Removal…

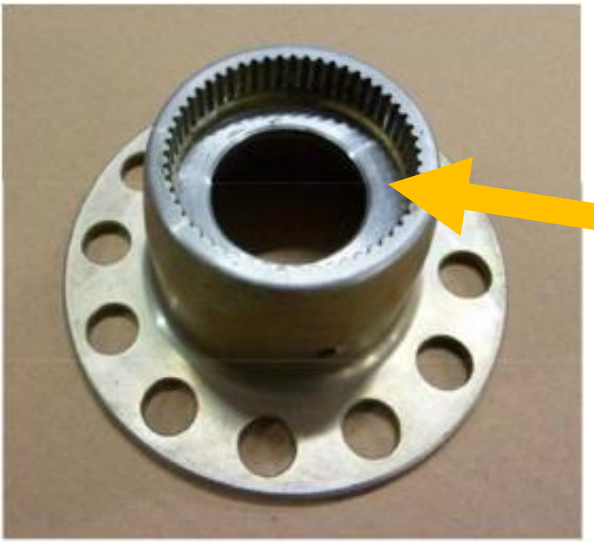

7. Carefully clean the prop flange paying particular attention to the flat mating surface face shown here

8. Carefully align then slide the prop flange over the splines of the crankshaft.

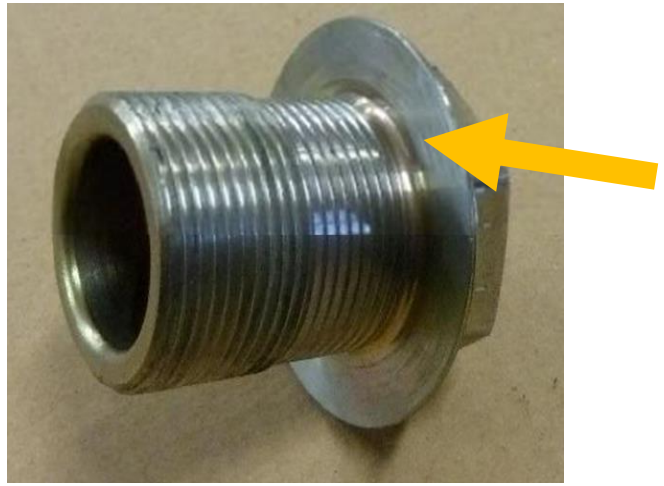

9. Carefully clean the bolt, especially cleaning the flat contact surface shown here.

Apply a small amount of grease to the flat surface AND the thread of the bolt.

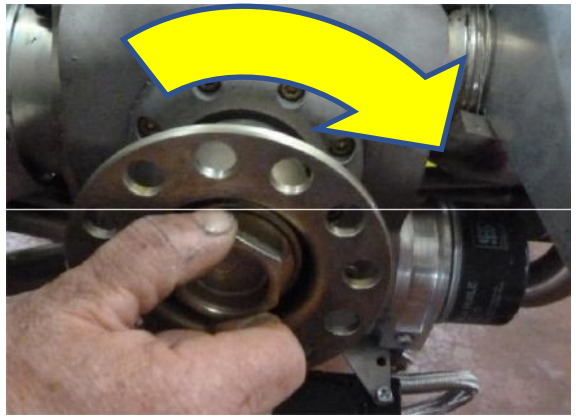

10. By hand, screw the bolt (right hand thread) into the crankshaft as far as possible.

Propeller Flange Removal…

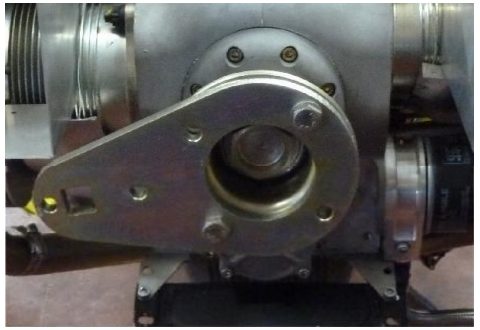

11. Attach the propeller flange holder (T063006) to the prop flange with M14 bolts

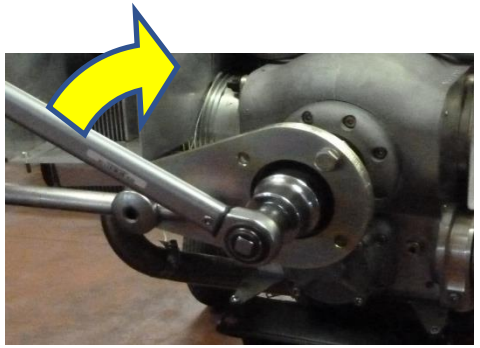

12. Torque the bolt to 300 Nm while holding the prop flange. (right hand thread)

13. Place the locking plate over the hex top of the bolt. Find out if the existing M6 hole in the locking plate correspond with the M6 hole in the flange. If not, move the ring through 60° (one flat) on the bolt.

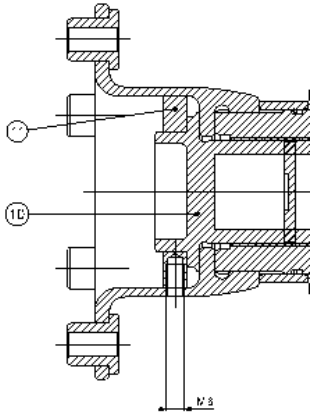

13 a. IF the M6 holes do not match, drill a hole ø5 through the locking plate and cut M6 thread until just touching the bottom of the hole.

14. Reinstall M6x15 grub screw until head is about 0.5mm below surface, using Loctite 243 and lock the screw again by punching 2 dimples

CAUTION!! It is possible during initial running that the flange bolt may lose a little torque. Therefore re-torque after 5 hours and again after 15 hours. Then, follow maintenance. manual.